# Hygiene (H)

Radiaator ruumidesse, kus on kõrgemad hügieeninõuded.

**Andmeleht**
2026-11-16

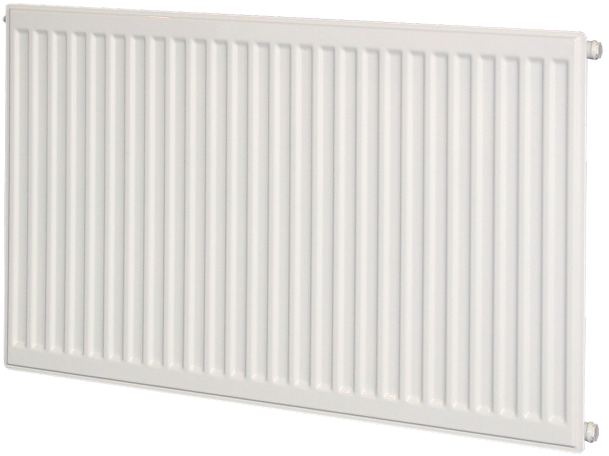

- Kergesti puhastatav
- Kõrge vastupidavus
- Hügieeniline disain
- Soojuslik tõhusus
- Mitmekülgsed paigaldusvõimalused

Purmo Hygiene on hügieeniline paneelradiaator ilma külgpaneelide ja ülemise restita; mõeldud ruumidele kõrgendatud sanitaarnõuetega, kergesti puhastatav, standardtoon RAL 9016, komplektis otsakork ja õhutusventiil, 10-aastane garantii.

**Kasutusala**
Hügieeniradiaator on mõeldud ruumidele, kus nõutav kõrge puhtustase, nagu haiglad, kliinikud, hooldekodud ja laborid, samuti muud ranged hügieeninõudedega keskkonnad. Valmistatud külmvaltsitud terasest elektrostaatilise pulbervärviga. Maksimaalne töörõhk kuni 10 bar ja kõrge kuumuskindlus.

**Mõõdistamine**
Õige tootevaliku tagamiseks kasutage meie kalkulaatoreid ja tootekatalooge. Kui vajate abi, võtke ühendust meie müügimeeskonnaga.

**Kasutamine**
Purmo Hygiene paneelradiaator paigalda puhastus- ja õhuvahega, ühenda nelja külgmise G 1/2 ühendusega ning puhasta regulaarselt heakskiidetud desinfitseerimisvahenditega, järgides ohutusnõudeid ja kasutades mudelile vastavaid kinnitusi.

**AMA-tekst**
Purmo Hygiene paneel on mõeldud kõrgete hügieeninõuetega ruumidele. Valmistatud külmvaltsitud terasest epoksükattega. Vastab EN 442-1, talub kuni 10 bar ja 110°C. Ilma konvektorite, külgplaatide ja ülemise restita – lihtsaks puhastamiseks ja tolmu vältimiseks. Saadaval erinevad suurused ja variandid (H10, H20, H30), paindlik paigaldus ja ühendusvõimalused. Sobib haiglatesse, kliinikutesse, laboritesse ja hooldeasutustesse.

# Spetsifikatsioonid

| OMADUSED | ÜHIK | VÄÄRTUSED |
|---|---|---|
| ETIM-klass | | EC011022 |
| Materjal | | Terase |
| Tüüp | | 10, 20, 30 |
| Pinnastruktuur | | Profiilitud |
| Maksimaalne töörõhk | bar | 10 |
| Standardühenduste arv | | 4 |
| Soojusandmine vastavalt EN 442 tunnustatud laborile | | Jah |
| Maksimaalne töötemperatuur | °C | 110 |
| Standardvärv | | Jah |
| Värv | | Valge |
| RAL-number | | 9016 |
| Rest/Katteplaat | | Jah |
| Rest/Katteplaat | | Jah |
| Läikeväärtus | | Särav |
| Keerme mõõt (toll) | | 1/2 tolli |
| Ühenduskeere | | Sisemine keere |
| Ühepunktiühendusega | | Jah |
| Õhutusühendusega | | Jah |
| Õhutusventiili/õhutusavaga | | Jah |
| Tühjendusvõimalusega | | Jah |

# Dokumendid

| DOKUMENDID | DOKUMENDI TÜÜP | LINK |
| --- | --- | --- |
| Tehniline kataloog paneelradiaatorid 2022 | ProductCatalog | https://blobfiles.purmogroup.app/public/1511221/2118619 |

# Ressursid

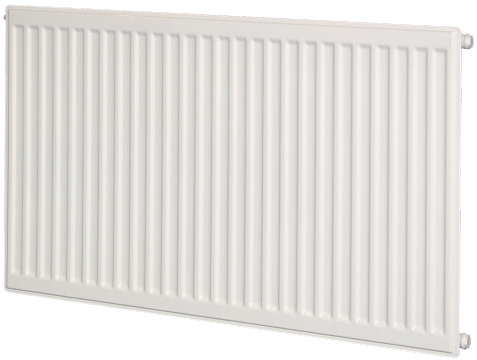

ProductImage - Panel radiator Purmo Hygiene, H.

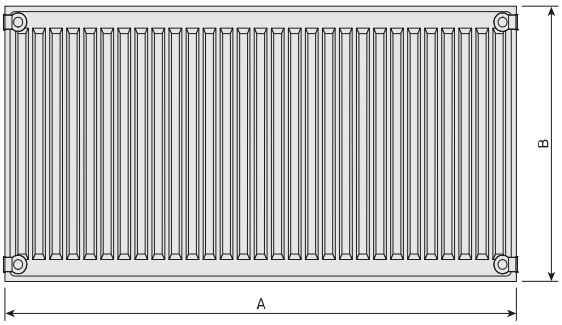


DimensionalDrawing - Hygiene, tüüp 10, tagantvaade




DimensionalDrawing - Hygiene, tüüp 30, pealtvaade

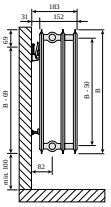

DimensionalDrawing - Drawing PR Hygiene T30 SV SSMS

# Ressursid

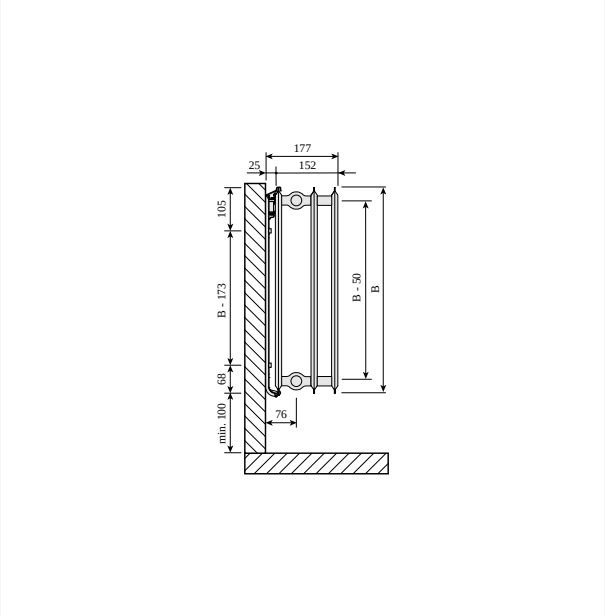


DimensionalDrawing - Hygiene, tüüp 30, külgvaade Monclac seinakanduritega

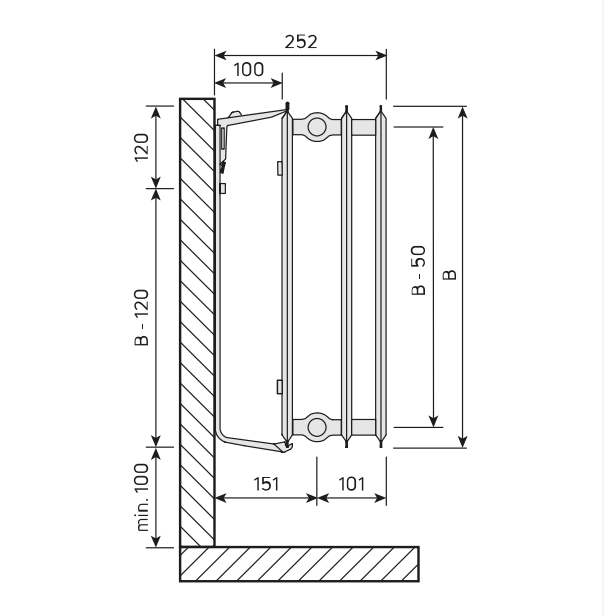


DimensionalDrawing - Hygiene, tüüp 30, külgvaade

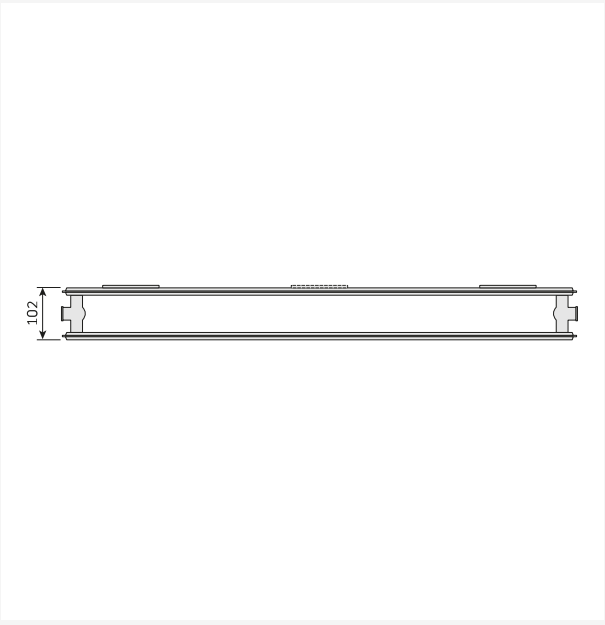


DimensionalDrawing - Hygiene, tüüp 20, pealtvaade

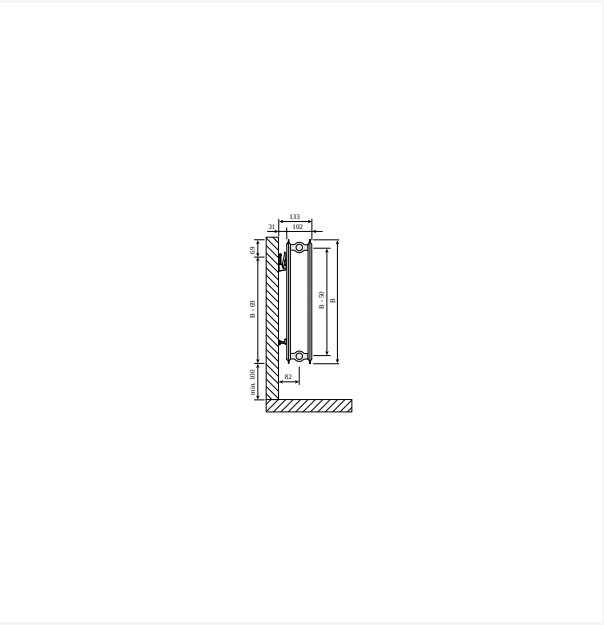

DimensionalDrawing - Drawing PR Hygiene T20 SV SSMS

# Ressursid

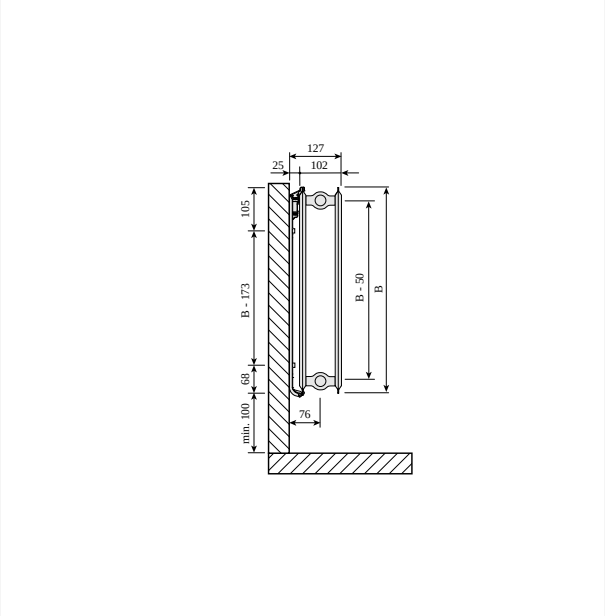


DimensionalDrawing - Hygiene, tüüp 20, külgvaade Monclac seinakanduritega

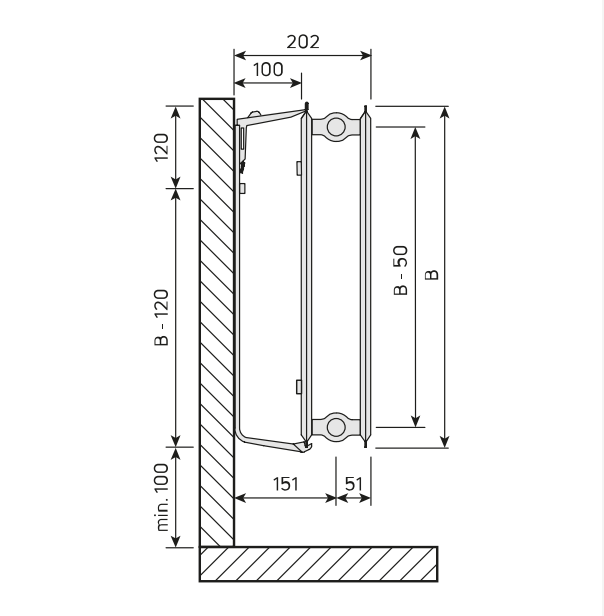


DimensionalDrawing - Hygiene, tüüp 20, külgvaade

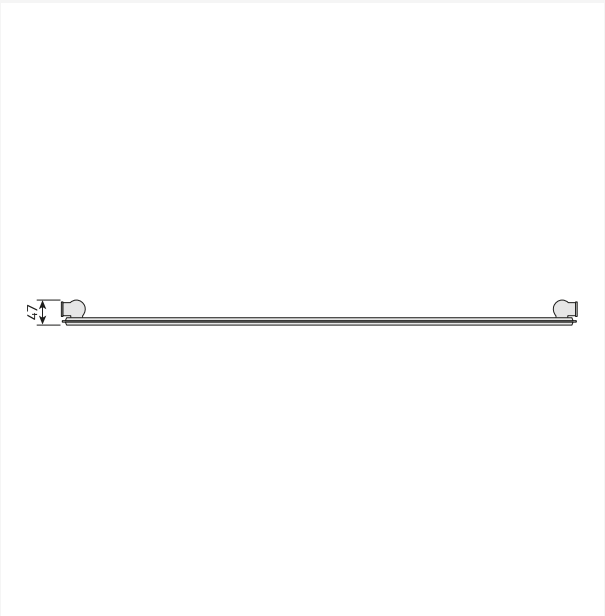


DimensionalDrawing - Hygiene, tüüp 10, pealtvaade

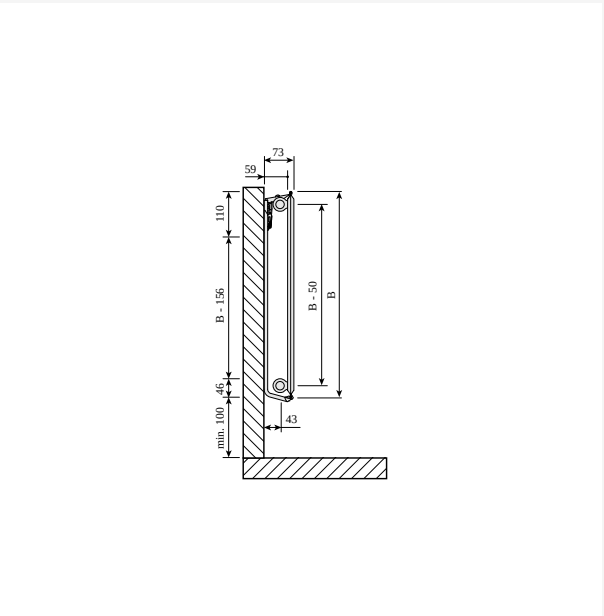


DimensionalDrawing - Hygiene, tüüp 10, külgvaade Monclac seinakanduritega

# Ressursid

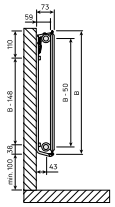

DimensionalDrawing - Hygiene, tüüp 10, külgvaade, MCK

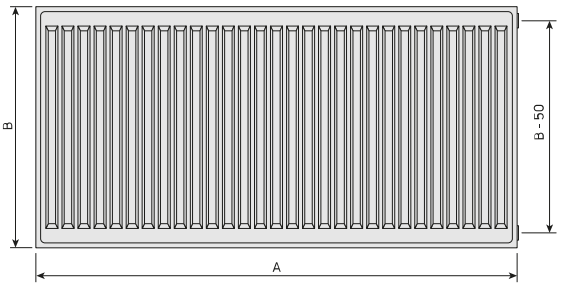


DimensionalDrawing - Hygiene, eestvaade

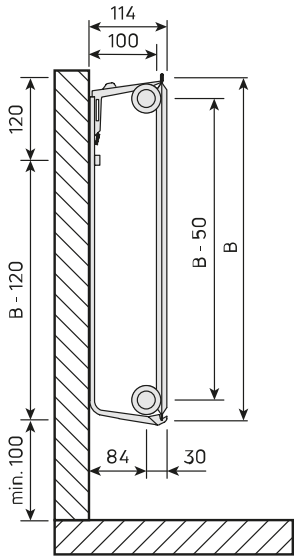


DimensionalDrawing - Hygiene, tüüp 10, külgvaade

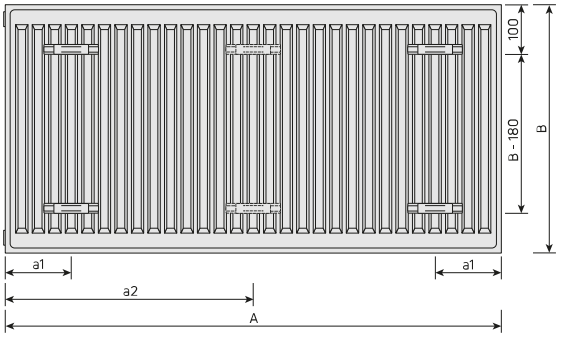


DimensionalDrawing - Hygiene, tagantvaade

# Ressursid

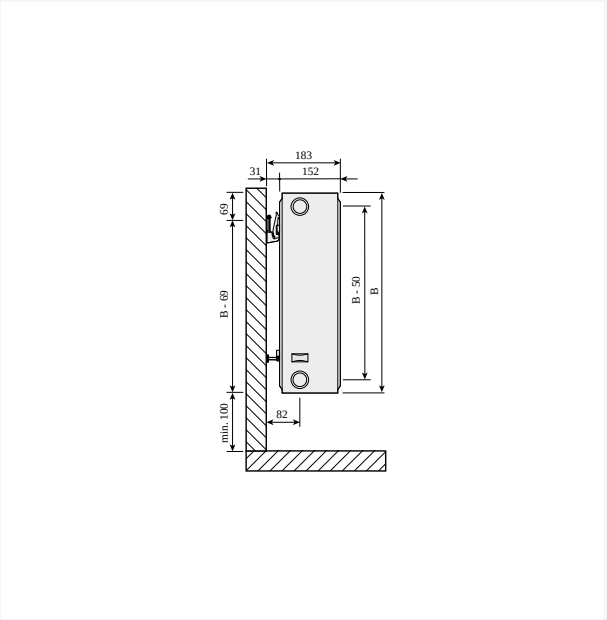


DimensionalDrawing - Compact, tüüp 33, külgvaade SSMS seinakanduritega

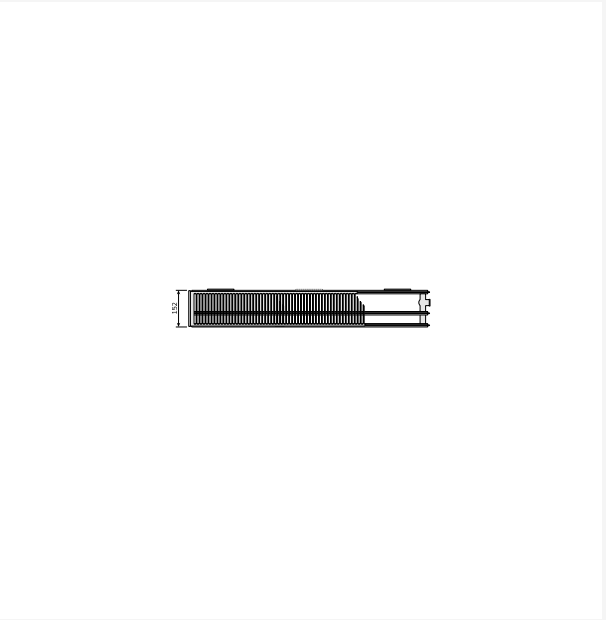


DimensionalDrawing - Hygiene Plan Compact, tüüp 30, pealtvaade

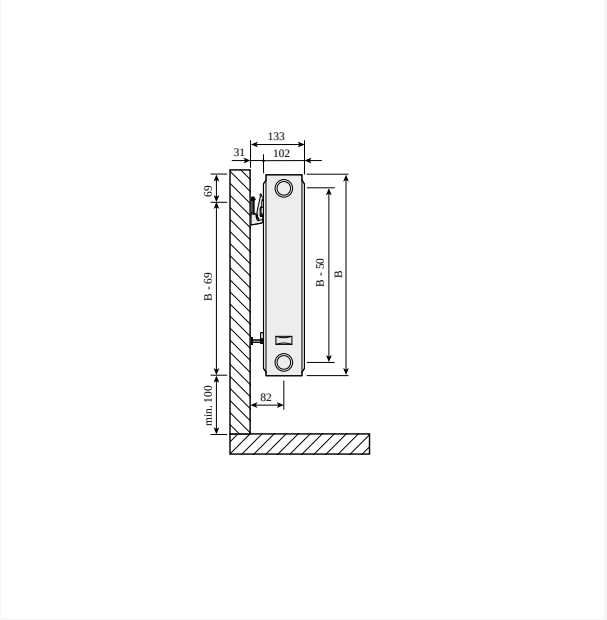


DimensionalDrawing - Compact, tüüp 22, külgvaade SSMS seinakanduritega

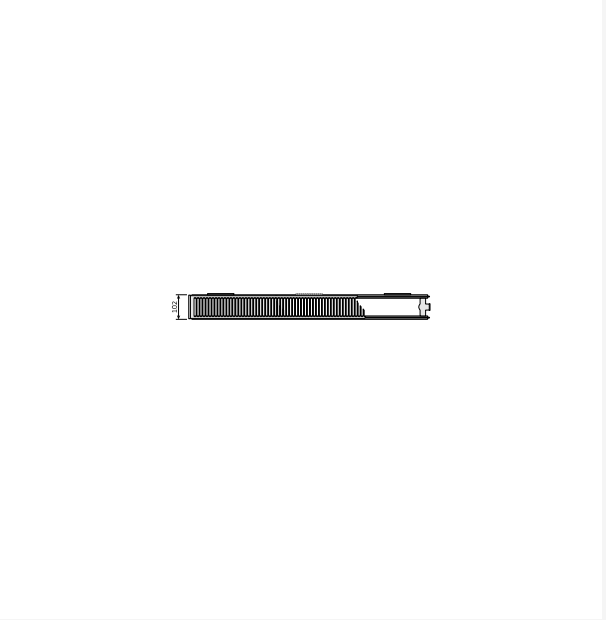


DimensionalDrawing - Hygiene Compact, tüüp 20, pealtvaade

# Seotud tooted



Õhutus- ja pimekorgi komplekt




Aerosool parandusvärv



Monclac seinakronstein



Õhutusvõti

# 300

| KÕRGUS 300 mm | PIKKUS | SÜGAVUS | | Võimsus (W) 45/35/20°C | Võimsus (W) 55/45/20°C | Võimsus (W) 60/45/20°C | MAHT (l) | N-ekponent | KAAL (kg) |
|---|---|---|---|---|---|---|---|---|---|
| **Tüüp 10** | | | | | | | | | |
| | 400 | 47 | F061003004001300 | 39 | 70 | 76 | 0.7 | 1.34 | 2.5 |
| | 500 | 47 | F061003005001300 | 49 | 88 | 95 | 0.8 | 1.34 | 3.1 |
| | 600 | 47 | F061003006001300 | 59 | 105 | 114 | 1.0 | 1.34 | 3.7 |
| | 700 | 47 | F061003007001300 | 69 | 123 | 134 | 1.2 | 1.34 | 4.3 |
| | 800 | 47 | F061003008001300 | 79 | 140 | 152 | 1.4 | 1.34 | 5.0 |
| | 900 | 47 | F061003009001300 | 89 | 158 | 171 | 1.5 | 1.34 | 5.6 |
| | 1000 | 47 | F061003010001300 | 99 | 175 | 190 | 1.7 | 1.34 | 6.2 |
| | 1100 | 47 | F061003011001300 | 109 | 193 | 210 | 1.9 | 1.34 | 6.7 |
| | 1200 | 47 | F061003012001300 | 119 | 210 | 229 | 2.0 | 1.34 | 7.3 |
| | 1400 | 47 | F061003014001300 | 138 | 245 | 267 | 2.4 | 1.34 | 8.3 |
| | 1600 | 47 | F061003016001300 | 158 | 280 | 305 | 2.7 | 1.34 | 9.4 |
| | 1800 | 47 | F061003018001300 | 178 | 316 | 343 | 3.1 | 1.34 | 10.5 |
| | 2000 | 47 | F061003020001300 | 198 | 351 | 381 | 3.4 | 1.34 | 11.5 |
| | 2300 | 47 | F061003023001300 | 227 | 403 | 438 | 3.9 | 1.34 | 13.1 |
| | 2600 | 47 | F061003026001300 | 257 | 456 | 495 | 4.4 | 1.34 | 14.7 |
| | 3000 | 47 | F061003030001300 | 296 | 526 | 571 | 5.1 | 1.34 | 16.8 |
| **Tüüp 20** | | | | | | | | | |
| | 400 | 102 | F062003004000300 | 76 | 131 | 142 | 1.4 | 1.28 | 4.9 |
| | 500 | 102 | F062003005000300 | 95 | 164 | 177 | 1.7 | 1.28 | 6.0 |
| | 600 | 102 | F062003006000300 | 114 | 196 | 213 | 2.0 | 1.28 | 7.2 |
| | 700 | 102 | F062003007000300 | 133 | 229 | 248 | 2.4 | 1.28 | 8.2 |
| | 800 | 102 | F062003008000300 | 152 | 262 | 284 | 2.7 | 1.28 | 9.1 |
| | 900 | 102 | F062003009000300 | 170 | 295 | 319 | 3.1 | 1.28 | 1.2 |
| | 1000 | 102 | F062003010000300 | 189 | 327 | 354 | 3.4 | 1.28 | 11.2 |

# 300

| KÕRGUS 300 mm | PIKKUS | SÜGAVUS | | Võimsus (W) 45/35/20°C | Võimsus (W) 55/45/20°C | Võimsus (W) 60/45/20°C | MAHT (l) | N-ekponent | KAAL (kg) |
|---|---|---|---|---|---|---|---|---|---|
| | 1100 | 102 | F062003011000300 | 208 | 360 | 390 | 3.7 | 1.28 | 12.3 |
| | 1200 | 102 | F062003012000300 | 227 | 393 | 425 | 4.1 | 1.28 | 13.3 |
| | 1400 | 102 | F062003014000300 | 265 | 458 | 496 | 4.8 | 1.28 | 15.4 |
| | 1600 | 102 | F062003016000300 | 303 | 524 | 567 | 5.4 | 1.28 | 17.5 |
| | 1800 | 102 | F062003018000300 | 341 | 589 | 638 | 6.1 | 1.28 | 19.7 |
| | 2000 | 102 | F062003020000300 | 379 | 655 | 709 | 6.8 | 1.28 | 21.7 |
| | 2300 | 102 | F062003023000300 | 436 | 753 | 815 | 7.8 | 1.28 | 24.8 |
| | 2600 | 102 | F062003026000300 | 493 | 851 | 921 | 8.8 | 1.28 | 28.0 |
| | 3000 | 102 | F062003030000300 | 568 | 982 | 1063 | 10.2 | 1.28 | 32.2 |
| **Tüüp 30** | | | | | | | | | |
| | 400 | 152 | F063003004000300 | 104 | 180 | 196 | 2.0 | 1.30 | 6.5 |
| | 500 | 152 | F063003005000300 | 130 | 225 | 244 | 2.5 | 1.30 | 8.2 |
| | 600 | 152 | F063003006000300 | 155 | 271 | 293 | 3.1 | 1.30 | 9.7 |
| | 700 | 152 | F063003007000300 | 182 | 316 | 342 | 3.6 | 1.30 | 11.3 |
| | 800 | 152 | F063003008000300 | 207 | 361 | 391 | 4.1 | 1.30 | 12.8 |
| | 900 | 152 | F063003009000300 | 234 | 406 | 440 | 4.6 | 1.30 | 14.3 |
| | 1000 | 152 | F063003010000300 | 259 | 451 | 489 | 5.1 | 1.30 | 15.9 |
| | 1100 | 152 | F063003011000300 | 285 | 496 | 537 | 5.6 | 1.30 | 17.5 |
| | 1200 | 152 | F063003012000300 | 311 | 541 | 586 | 6.1 | 1.30 | 19.4 |
| | 1400 | 152 | F063003014000300 | 363 | 631 | 684 | 7.1 | 1.30 | 22.2 |
| | 1600 | 152 | F063003016000300 | 415 | 721 | 781 | 8.2 | 1.30 | 25.3 |
| | 1800 | 152 | F063003018000300 | 467 | 812 | 879 | 9.2 | 1.30 | 28.4 |
| | 2000 | 152 | F063003020000300 | 519 | 902 | 977 | 10.2 | 1.30 | 31.6 |
| | 2300 | 152 | F063003023000300 | 597 | 1037 | 1123 | 11.7 | 1.30 | 36.3 |
| | 2600 | 152 | F063003026000300 | 674 | 1172 | 1270 | 13.3 | 1.30 | 5.0 |
| | 3000 | 152 | F063003030000300 | 778 | 1353 | 1465 | 15.3 | 1.30 | 47.2 |

# 400

| KÕRGUS 400 mm | PIKKUS | SÜGAVUS | | Võimsus (W) 45/35/20°C | Võimsus (W) 55/45/20°C | Võimsus (W) 60/45/20°C | MAHT (l) | N-ekponent | KAAL (kg) |
|---|---|---|---|---|---|---|---|---|---|
| **Tüüp 10** | | | | | | | | | |
| | 400 | 47 | F061004004001300 | 52 | 91 | 99 | 0.9 | 1.33 | 3.1 |
| | 500 | 47 | F061004005001300 | 65 | 114 | 124 | 1.1 | 1.33 | 3.9 |
| | 600 | 47 | F061004006001300 | 78 | 137 | 148 | 1.3 | 1.33 | 4.7 |
| | 700 | 47 | F061004007001300 | 91 | 160 | 173 | 1.5 | 1.33 | 5.5 |
| | 800 | 47 | F061004008001300 | 104 | 183 | 198 | 1.8 | 1.33 | 6.2 |
| | 900 | 47 | F061004009001300 | 117 | 205 | 223 | 2.0 | 1.33 | 7.0 |
| | 1000 | 47 | F061004010001300 | 130 | 228 | 248 | 2.2 | 1.33 | 7.8 |
| | 1100 | 47 | F061004011001300 | 143 | 251 | 272 | 2.4 | 1.33 | 8.5 |
| | 1200 | 47 | F061004012001300 | 156 | 274 | 297 | 2.6 | 1.33 | 9.2 |
| | 1400 | 47 | F061004014001300 | 181 | 319 | 347 | 3.1 | 1.33 | 10.6 |
| | 1600 | 47 | F061004016001300 | 207 | 365 | 396 | 3.5 | 1.33 | 12.0 |
| | 1800 | 47 | F061004018001300 | 233 | 411 | 446 | 4.0 | 1.33 | 13.3 |
| | 2000 | 47 | F061004020001300 | 259 | 456 | 495 | 4.4 | 1.33 | 14.7 |
| | 2300 | 47 | F061004023001300 | 298 | 525 | 570 | 5.1 | 1.33 | 16.8 |
| | 2600 | 47 | F061004026001300 | 337 | 593 | 644 | 5.7 | 1.33 | 18.9 |
| | 3000 | 47 | F061004030001300 | 389 | 684 | 743 | 6.6 | 1.33 | 21.7 |
| **Tüüp 20** | | | | | | | | | |
| | 400 | 102 | F062004004000300 | 95 | 163 | 177 | 1.8 | 1.28 | 6.1 |
| | 500 | 102 | F062004005000300 | 118 | 204 | 221 | 2.3 | 1.28 | 7.5 |
| | 600 | 102 | F062004006000300 | 142 | 245 | 265 | 2.7 | 1.28 | 8.9 |
| | 700 | 102 | F062004007000300 | 165 | 286 | 310 | 3.1 | 1.28 | 1.2 |
| | 800 | 102 | F062004008000300 | 189 | 327 | 354 | 3.6 | 1.28 | 11.6 |
| | 900 | 102 | F062004009000300 | 212 | 368 | 398 | 4.0 | 1.28 | 13.3 |
| | 1000 | 102 | F062004010000300 | 236 | 409 | 442 | 4.5 | 1.28 | 14.4 |
| | 1100 | 102 | F062004011000300 | 260 | 449 | 487 | 5.0 | 1.28 | 15.7 |

# 400

| KÕRGUS 400 mm | PIKKUS | SÜGAVUS | | Võimsus (W) 45/35/20°C | Võimsus (W) 55/45/20°C | Võimsus (W) 60/45/20°C | MAHT (l) | N-ekponent | KAAL (kg) |
|---|---|---|---|---|---|---|---|---|---|
| | 1200 | 102 | F062004012000300 | 283 | 490 | 531 | 5.4 | 1.28 | 17.1 |
| | 1400 | 102 | F062004014000300 | 331 | 572 | 619 | 6.3 | 1.28 | 19.9 |
| | 1600 | 102 | F062004016000300 | 378 | 654 | 708 | 7.2 | 1.28 | 22.6 |
| | 1800 | 102 | F062004018000300 | 425 | 735 | 796 | 8.1 | 1.28 | 25.4 |
| | 2000 | 102 | F062004020000300 | 472 | 817 | 885 | 9.0 | 1.28 | 28.1 |
| | 2300 | 102 | F062004023000300 | 543 | 940 | 1017 | 10.3 | 1.28 | 32.2 |
| | 2600 | 102 | F062004026000300 | 614 | 1062 | 1150 | 11.7 | 1.28 | 36.4 |
| | 3000 | 102 | F062004030000300 | 709 | 1226 | 1327 | 13.5 | 1.28 | 41.9 |
| **Tüüp 30** | | | | | | | | | |
| | 400 | 152 | F063004004000300 | 130 | 226 | 245 | 2.7 | 1.30 | 8.4 |
| | 500 | 152 | F063004005000300 | 162 | 283 | 306 | 3.4 | 1.30 | 1.5 |
| | 600 | 152 | F063004006000300 | 195 | 339 | 368 | 4.0 | 1.30 | 12.5 |
| | 700 | 152 | F063004007000300 | 227 | 396 | 429 | 4.7 | 1.30 | 14.5 |
| | 800 | 152 | F063004008000300 | 259 | 452 | 490 | 5.4 | 1.30 | 16.6 |
| | 900 | 152 | F063004009000300 | 292 | 509 | 551 | 6.0 | 1.30 | 18.6 |
| | 1000 | 152 | F063004010000300 | 324 | 565 | 612 | 6.7 | 1.30 | 2.7 |
| | 1100 | 152 | F063004011000300 | 357 | 622 | 674 | 7.4 | 1.30 | 22.8 |
| | 1200 | 152 | F063004012000300 | 389 | 678 | 735 | 8.0 | 1.30 | 24.8 |
| | 1400 | 152 | F063004014000300 | 454 | 791 | 857 | 9.4 | 1.30 | 29.0 |
| | 1600 | 152 | F063004016000300 | 519 | 904 | 980 | 10.7 | 1.30 | 33.7 |
| | 1800 | 152 | F063004018000300 | 584 | 1017 | 1102 | 12.1 | 1.30 | 37.2 |
| | 2000 | 152 | F063004020000300 | 649 | 1130 | 1225 | 13.4 | 1.30 | 41.3 |
| | 2300 | 152 | F063004023000300 | 746 | 1300 | 1408 | 15.4 | 1.30 | 47.5 |
| | 2600 | 152 | F063004026000300 | 844 | 1469 | 1592 | 17.4 | 1.30 | 53.7 |
| | 3000 | 152 | F063004030000300 | 973 | 1695 | 1837 | 20.1 | 1.30 | 61.9 |

# 450

| KÕRGUS 450 mm | PIKKUS | SÜGAVUS | | Võimsus (W) 45/35/20°C | Võimsus (W) 55/45/20°C | Võimsus (W) 60/45/20°C | MAHT (l) | N-ekponent | KAAL (kg) |
|---|---|---|---|---|---|---|---|---|---|
| **Tüüp 10** | | | | | | | | | |
| | 400 | 47 | F061004504001300 | 58 | 102 | 110 | 1.0 | 1.32 | 3.8 |
| | 500 | 47 | F061004505001300 | 72 | 127 | 138 | 1.3 | 1.32 | 4.7 |
| | 600 | 47 | F061004506001300 | 87 | 152 | 166 | 1.5 | 1.32 | 5.6 |
| | 700 | 47 | F061004507001300 | 101 | 178 | 193 | 1.8 | 1.32 | 6.6 |
| | 800 | 47 | F061004508001300 | 116 | 203 | 220 | 2.0 | 1.32 | 7.5 |
| | 900 | 47 | F061004509001300 | 130 | 229 | 248 | 2.3 | 1.32 | 8.5 |
| | 1000 | 47 | F061004510001300 | 145 | 254 | 276 | 2.5 | 1.32 | 9.4 |
| | 1100 | 47 | F061004511001300 | 159 | 280 | 303 | 2.8 | 1.32 | 10.2 |
| | 1200 | 47 | F061004512001300 | 174 | 305 | 331 | 3.0 | 1.32 | 11.0 |
| | 1400 | 47 | F061004514001300 | 203 | 356 | 386 | 3.5 | 1.32 | 12.7 |
| | 1600 | 47 | F061004516001300 | 232 | 407 | 441 | 4.0 | 1.32 | 14.4 |
| | 1800 | 47 | F061004518001300 | 261 | 457 | 496 | 4.5 | 1.32 | 16.1 |
| | 2000 | 47 | F061004520001300 | 290 | 508 | 551 | 5.0 | 1.32 | 17.8 |
| | 2300 | 47 | F061004523001300 | 333 | 584 | 634 | 5.8 | 1.32 | 20.3 |
| | 2600 | 47 | F061004526001300 | 377 | 661 | 717 | 6.5 | 1.32 | 22.8 |
| | 3000 | 47 | F061004530001300 | 434 | 762 | 827 | 7.5 | 1.32 | 26.2 |
| **Tüüp 20** | | | | | | | | | |
| | 400 | 102 | F062004504000300 | 104 | 179 | 194 | 2.0 | 1.28 | 7.2 |
| | 500 | 102 | F062004505000300 | 129 | 224 | 242 | 2.5 | 1.28 | 8.8 |
| | 600 | 102 | F062004506000300 | 155 | 269 | 291 | 3.0 | 1.28 | 1.6 |
| | 700 | 102 | F062004507000300 | 181 | 313 | 339 | 3.5 | 1.28 | 12.2 |
| | 800 | 102 | F062004508000300 | 207 | 358 | 388 | 4.0 | 1.28 | 13.9 |
| | 900 | 102 | F062004509000300 | 233 | 403 | 436 | 4.5 | 1.28 | 15.5 |
| | 1000 | 102 | F062004510000300 | 259 | 448 | 485 | 5.0 | 1.28 | 17.2 |
| | 1100 | 102 | F062004511000300 | 285 | 493 | 533 | 5.5 | 1.28 | 18.9 |

# 450

| KÕRGUS 450 mm | PIKKUS | SÜGAVUS | | Võimsus (W) 45/35/20°C | Võimsus (W) 55/45/20°C | Võimsus (W) 60/45/20°C | MAHT (l) | N-ekponent | KAAL (kg) |
|---|---|---|---|---|---|---|---|---|---|
| | 1200 | 102 | F062004512000300 | 311 | 537 | 582 | 6.0 | 1.28 | 2.6 |
| | 1400 | 102 | F062004514000300 | 362 | 627 | 679 | 7.0 | 1.28 | 23.9 |
| | 1600 | 102 | F062004516000300 | 414 | 716 | 775 | 8.0 | 1.28 | 27.3 |
| | 1800 | 102 | F062004518000300 | 466 | 806 | 872 | 9.0 | 1.28 | 3.6 |
| | 2000 | 102 | F062004520000300 | 518 | 895 | 969 | 10.0 | 1.28 | 34.0 |
| | 2300 | 102 | F062004523000300 | 595 | 1030 | 1115 | 11.5 | 1.28 | 39.0 |
| | 2600 | 102 | F062004526000300 | 673 | 1164 | 1260 | 13.0 | 1.28 | 44.2 |
| | 3000 | 102 | F062004530000300 | 776 | 1343 | 1454 | 15.0 | 1.28 | 5.7 |
| **Tüüp 30** | | | | | | | | | |
| | 400 | 152 | F063004504000300 | 142 | 248 | 269 | 3.0 | 1.30 | 10.1 |
| | 500 | 152 | F063004505000300 | 178 | 310 | 336 | 3.8 | 1.30 | 12.4 |
| | 600 | 152 | F063004506000300 | 213 | 372 | 403 | 4.5 | 1.30 | 14.9 |
| | 700 | 152 | F063004507000300 | 249 | 434 | 470 | 5.3 | 1.30 | 17.4 |
| | 800 | 152 | F063004508000300 | 284 | 496 | 537 | 6.0 | 1.30 | 19.9 |
| | 900 | 152 | F063004509000300 | 320 | 557 | 604 | 6.8 | 1.30 | 22.4 |
| | 1000 | 152 | F063004510000300 | 355 | 619 | 671 | 7.5 | 1.30 | 24.9 |
| | 1100 | 152 | F063004511000300 | 391 | 681 | 738 | 8.3 | 1.30 | 27.4 |
| | 1200 | 152 | F063004512000300 | 426 | 743 | 806 | 9.0 | 1.30 | 29.9 |
| | 1400 | 152 | F063004514000300 | 497 | 867 | 940 | 10.5 | 1.30 | 34.9 |
| | 1600 | 152 | F063004516000300 | 568 | 991 | 1074 | 12.0 | 1.30 | 39.9 |
| | 1800 | 152 | F063004518000300 | 639 | 1115 | 1208 | 13.5 | 1.30 | 44.9 |
| | 2000 | 152 | F063004520000300 | 711 | 1239 | 1343 | 15.0 | 1.30 | 49.9 |
| | 2300 | 152 | F063004523000300 | 817 | 1425 | 1544 | 17.3 | 1.30 | 57.4 |
| | 2600 | 152 | F063004526000300 | 924 | 1610 | 1745 | 19.5 | 1.30 | 64.9 |
| | 3000 | 152 | F063004530000300 | 1066 | 1858 | 2014 | 22.5 | 1.30 | 74.9 |

# 500

| KÕRGUS 500 mm | PIKKUS | SÜGAVUS | | Võimsus (W) 45/35/20°C | Võimsus (W) 55/45/20°C | Võimsus (W) 60/45/20°C | MAHT (l) | N-ekponent | KAAL (kg) |
|---|---|---|---|---|---|---|---|---|---|
| **Tüüp 10** | | | | | | | | | |
| | 400 | 47 | F061005004001300 | 64 | 112 | 121 | 1.1 | 1.31 | 3.8 |
| | 500 | 47 | F061005005001300 | 80 | 140 | 152 | 1.4 | 1.31 | 4.8 |
| | 600 | 47 | F061005006001300 | 96 | 168 | 182 | 1.6 | 1.31 | 5.7 |
| | 700 | 47 | F061005007001300 | 112 | 196 | 212 | 1.9 | 1.31 | 6.7 |
| | 800 | 47 | F061005008001300 | 128 | 224 | 243 | 2.2 | 1.31 | 7.6 |
| | 900 | 47 | F061005009001300 | 144 | 252 | 273 | 2.4 | 1.31 | 8.6 |
| | 1000 | 47 | F061005010001300 | 160 | 280 | 303 | 2.7 | 1.31 | 9.5 |
| | 1100 | 47 | F061005011001300 | 176 | 308 | 334 | 3.0 | 1.31 | 10.4 |
| | 1200 | 47 | F061005012001300 | 192 | 336 | 364 | 3.2 | 1.31 | 11.3 |
| | 1400 | 47 | F061005014001300 | 224 | 392 | 425 | 3.8 | 1.31 | 13.1 |
| | 1600 | 47 | F061005016001300 | 256 | 448 | 486 | 4.3 | 1.31 | 14.9 |
| | 1800 | 47 | F061005018001300 | 288 | 504 | 546 | 4.9 | 1.31 | 16.7 |
| | 2000 | 47 | F061005020001300 | 320 | 560 | 607 | 5.4 | 1.31 | 19.0 |
| | 2300 | 47 | F061005023001300 | 368 | 644 | 698 | 6.2 | 1.31 | 21.1 |
| | 2600 | 47 | F061005026001300 | 416 | 728 | 789 | 7.0 | 1.31 | 23.8 |
| | 3000 | 47 | F061005030001300 | 480 | 839 | 910 | 8.1 | 1.31 | 27.4 |
| **Tüüp 20** | | | | | | | | | |
| | 400 | 102 | F062005004000300 | 112 | 195 | 211 | 2.2 | 1.29 | 7.4 |
| | 500 | 102 | F062005005000300 | 140 | 243 | 263 | 2.8 | 1.29 | 9.3 |
| | 600 | 102 | F062005006000300 | 169 | 292 | 316 | 3.3 | 1.29 | 1.8 |
| | 700 | 102 | F062005007000300 | 197 | 340 | 369 | 3.9 | 1.29 | 12.5 |
| | 800 | 102 | F062005008000300 | 225 | 389 | 421 | 4.4 | 1.29 | 14.2 |
| | 900 | 102 | F062005009000300 | 253 | 438 | 474 | 5.0 | 1.29 | 15.9 |
| | 1000 | 102 | F062005010000300 | 281 | 486 | 527 | 5.5 | 1.29 | 17.6 |
| | 1100 | 102 | F062005011000300 | 309 | 535 | 579 | 6.0 | 1.29 | 19.4 |

# 500

| KÕRGUS 500 mm | PIKKUS | SÜGAVUS | | Võimsus (W) 45/35/20°C | Võimsus (W) 55/45/20°C | Võimsus (W) 60/45/20°C | MAHT (l) | N-ekponent | KAAL (kg) |
|---|---|---|---|---|---|---|---|---|---|
| | 1200 | 102 | F062005012000300 | 337 | 584 | 632 | 6.6 | 1.29 | 21.5 |
| | 1400 | 102 | F062005014000300 | 393 | 681 | 737 | 7.7 | 1.29 | 24.5 |
| | 1600 | 102 | F062005016000300 | 450 | 778 | 843 | 8.8 | 1.29 | 27.9 |
| | 1800 | 102 | F062005018000300 | 506 | 876 | 948 | 9.9 | 1.29 | 31.4 |
| | 2000 | 102 | F062005020000300 | 562 | 973 | 1053 | 11.0 | 1.29 | 34.7 |
| | 2300 | 102 | F062005023000300 | 646 | 1119 | 1211 | 12.7 | 1.29 | 39.8 |
| | 2600 | 102 | F062005026000300 | 731 | 1265 | 1369 | 14.3 | 1.29 | 45.0 |
| | 3000 | 102 | F062005030000300 | 843 | 1459 | 1580 | 16.5 | 1.29 | 51.8 |
| **Tüüp 30** | | | | | | | | | |
| | 400 | 152 | F063005004000300 | 154 | 269 | 292 | 3.3 | 1.31 | 10.0 |
| | 500 | 152 | F063005005000300 | 193 | 336 | 365 | 4.1 | 1.31 | 12.4 |
| | 600 | 152 | F063005006000300 | 231 | 403 | 437 | 4.9 | 1.31 | 15.0 |
| | 700 | 152 | F063005007000300 | 269 | 470 | 510 | 5.7 | 1.31 | 17.5 |
| | 800 | 152 | F063005008000300 | 308 | 538 | 583 | 6.6 | 1.31 | 2.8 |
| | 900 | 152 | F063005009000300 | 346 | 605 | 656 | 7.4 | 1.31 | 22.6 |
| | 1000 | 152 | F063005010000300 | 385 | 672 | 729 | 8.2 | 1.31 | 25.2 |
| | 1100 | 152 | F063005011000300 | 424 | 739 | 801 | 9.0 | 1.31 | 27.8 |
| | 1200 | 152 | F063005012000300 | 462 | 806 | 874 | 9.8 | 1.31 | 3.3 |
| | 1400 | 152 | F063005014000300 | 539 | 941 | 1020 | 11.5 | 1.31 | 35.5 |
| | 1600 | 152 | F063005016000300 | 616 | 1075 | 1165 | 13.1 | 1.31 | 4.6 |
| | 1800 | 152 | F063005018000300 | 693 | 1210 | 1311 | 14.8 | 1.31 | 45.8 |
| | 2000 | 152 | F063005020000300 | 770 | 1344 | 1457 | 16.4 | 1.31 | 5.9 |
| | 2300 | 152 | F063005023000300 | 886 | 1546 | 1675 | 18.9 | 1.31 | 58.5 |
| | 2600 | 152 | F063005026000300 | 1001 | 1747 | 1894 | 21.3 | 1.31 | 66.2 |
| | 3000 | 152 | F063005030000300 | 1155 | 2016 | 2185 | 24.6 | 1.31 | 76.5 |

# 550

| KÕRGUS 550 mm | PIKKUS | SÜGAVUS | | Võimsus (W) 45/35/20°C | Võimsus (W) 55/45/20°C | Võimsus (W) 60/45/20°C | MAHT (l) | N-ekponent | KAAL (kg) |
|---|---|---|---|---|---|---|---|---|---|
| **Tüüp 10** | | | | | | | | | |
| | 400 | 47 | F061005504001300 | 70 | 122 | 132 | 1.2 | 1.30 | 4.3 |
| | 500 | 47 | F061005505001300 | 88 | 153 | 165 | 1.5 | 1.30 | 5.3 |
| | 600 | 47 | F061005506001300 | 105 | 183 | 198 | 1.8 | 1.30 | 6.4 |
| | 700 | 47 | F061005507001300 | 123 | 214 | 232 | 2.1 | 1.30 | 7.5 |
| | 800 | 47 | F061005508001300 | 140 | 244 | 265 | 2.4 | 1.30 | 8.6 |
| | 900 | 47 | F061005509001300 | 158 | 275 | 298 | 2.7 | 1.30 | 9.6 |
| | 1000 | 47 | F061005510001300 | 175 | 305 | 331 | 3.0 | 1.30 | 10.7 |
| | 1100 | 47 | F061005511001300 | 193 | 336 | 364 | 3.3 | 1.30 | 11.6 |
| | 1200 | 47 | F061005512001300 | 210 | 366 | 397 | 3.6 | 1.30 | 12.6 |
| | 1400 | 47 | F061005514001300 | 245 | 427 | 463 | 4.2 | 1.30 | 14.6 |
| | 1600 | 47 | F061005516001300 | 280 | 488 | 529 | 4.8 | 1.30 | 16.5 |
| | 1800 | 47 | F061005518001300 | 315 | 549 | 595 | 5.4 | 1.30 | 18.5 |
| | 2000 | 47 | F061005520001300 | 351 | 610 | 661 | 6.0 | 1.30 | 20.4 |
| | 2300 | 47 | F061005523001300 | 403 | 702 | 761 | 6.9 | 1.30 | 23.3 |
| | 2600 | 47 | F061005526001300 | 456 | 794 | 860 | 7.8 | 1.30 | 26.2 |
| | 3000 | 47 | F061005530001300 | 526 | 916 | 992 | 9.0 | 1.30 | 28.5 |
| **Tüüp 20** | | | | | | | | | |
| | 400 | 102 | F062005504000300 | 121 | 210 | 227 | 2.4 | 1.29 | 8.2 |
| | 500 | 102 | F062005505000300 | 151 | 262 | 284 | 3.0 | 1.29 | 1.4 |
| | 600 | 102 | F062005506000300 | 182 | 315 | 341 | 3.7 | 1.29 | 12.3 |
| | 700 | 102 | F062005507000300 | 212 | 367 | 397 | 4.3 | 1.29 | 14.3 |
| | 800 | 102 | F062005508000300 | 242 | 420 | 454 | 4.9 | 1.29 | 16.4 |
| | 900 | 102 | F062005509000300 | 273 | 472 | 511 | 5.5 | 1.29 | 18.4 |
| | 1000 | 102 | F062005510000300 | 303 | 525 | 568 | 6.1 | 1.29 | 2.6 |
| | 1100 | 102 | F062005511000300 | 333 | 577 | 625 | 6.7 | 1.29 | 22.5 |

# 550

| KÕRGUS 550 mm | PIKKUS | SÜGAVUS | | Võimsus (W) 45/35/20°C | Võimsus (W) 55/45/20°C | Võimsus (W) 60/45/20°C | MAHT (l) | N-ekponent | KAAL (kg) |
|---|---|---|---|---|---|---|---|---|---|
| | 1200 | 102 | F062005512000300 | 364 | 629 | 681 | 7.3 | 1.29 | 24.5 |
| | 1400 | 102 | F062005514000300 | 424 | 734 | 795 | 8.5 | 1.29 | 28.6 |
| | 1600 | 102 | F062005516000300 | 485 | 839 | 909 | 9.8 | 1.29 | 32.6 |
| | 1800 | 102 | F062005518000300 | 545 | 944 | 1022 | 11.0 | 1.29 | 36.7 |
| | 2000 | 102 | F062005520000300 | 606 | 1049 | 1136 | 12.2 | 1.29 | 4.7 |
| | 2300 | 102 | F062005523000300 | 697 | 1206 | 1306 | 14.0 | 1.29 | 46.7 |
| | 2600 | 102 | F062005526000300 | 788 | 1364 | 1476 | 15.9 | 1.29 | 52.8 |
| | 3000 | 102 | F062005530000300 | 909 | 1574 | 1704 | 18.3 | 1.29 | 6.9 |
| **Tüüp 30** | | | | | | | | | |
| | 400 | 152 | F063005504000300 | 166 | 289 | 314 | 3.6 | 1.31 | 1.7 |
| | 500 | 152 | F063005505000300 | 207 | 362 | 392 | 4.5 | 1.31 | 13.7 |
| | 600 | 152 | F063005506000300 | 248 | 434 | 470 | 5.4 | 1.31 | 16.5 |
| | 700 | 152 | F063005507000300 | 290 | 506 | 549 | 6.3 | 1.31 | 19.5 |
| | 800 | 152 | F063005508000300 | 331 | 578 | 627 | 7.2 | 1.31 | 22.4 |
| | 900 | 152 | F063005509000300 | 372 | 651 | 705 | 8.1 | 1.31 | 25.3 |
| | 1000 | 152 | F063005510000300 | 414 | 723 | 784 | 9.0 | 1.31 | 28.3 |
| | 1100 | 152 | F063005511000300 | 455 | 795 | 862 | 9.9 | 1.31 | 31.2 |
| | 1200 | 152 | F063005512000300 | 497 | 868 | 941 | 10.8 | 1.31 | 34.1 |
| | 1400 | 152 | F063005514000300 | 579 | 1012 | 1097 | 12.6 | 1.31 | 40.0 |
| | 1600 | 152 | F063005516000300 | 662 | 1157 | 1254 | 14.4 | 1.31 | 45.8 |
| | 1800 | 152 | F063005518000300 | 745 | 1301 | 1411 | 16.2 | 1.31 | 51.7 |
| | 2000 | 152 | F063005520000300 | 828 | 1446 | 1568 | 18.0 | 1.31 | 57.6 |
| | 2300 | 152 | F063005523000300 | 952 | 1663 | 1803 | 20.7 | 1.31 | 66.3 |
| | 2600 | 152 | F063005526000300 | 1076 | 1880 | 2038 | 23.4 | 1.31 | 75.1 |
| | 3000 | 152 | F063005530000300 | 1242 | 2169 | 2351 | 27.0 | 1.31 | 86.9 |

# 600

| KÕRGUS 600 mm | PIKKUS | SÜGAVUS | | Võimsus (W) 45/35/20°C | Võimsus (W) 55/45/20°C | Võimsus (W) 60/45/20°C | MAHT (l) | N-ekponent | KAAL (kg) |
|---|---|---|---|---|---|---|---|---|---|
| **Tüüp 10** | | | | | | | | | |
| | 400 | 47 | F061006004001300 | 76 | 132 | 143 | 1.3 | 1.29 | 4.6 |
| | 500 | 47 | F061006005001300 | 95 | 165 | 179 | 1.6 | 1.29 | 5.8 |
| | 600 | 47 | F061006006001300 | 114 | 198 | 214 | 1.9 | 1.29 | 7.0 |
| | 700 | 47 | F061006007001300 | 133 | 231 | 250 | 2.2 | 1.29 | 8.1 |
| | 800 | 47 | F061006008001300 | 152 | 264 | 286 | 2.6 | 1.29 | 9.3 |
| | 900 | 47 | F061006009001300 | 171 | 297 | 322 | 2.9 | 1.29 | 10.4 |
| | 1000 | 47 | F061006010001300 | 190 | 330 | 358 | 3.2 | 1.29 | 11.6 |
| | 1100 | 47 | F061006011001300 | 209 | 363 | 394 | 3.5 | 1.29 | 12.6 |
| | 1200 | 47 | F061006012001300 | 228 | 396 | 429 | 3.8 | 1.29 | 13.7 |
| | 1400 | 47 | F061006014001300 | 267 | 462 | 501 | 4.5 | 1.29 | 15.8 |
| | 1600 | 47 | F061006016001300 | 304 | 529 | 572 | 5.1 | 1.29 | 17.9 |
| | 1800 | 47 | F061006018001300 | 343 | 595 | 644 | 5.8 | 1.29 | 20.0 |
| | 2000 | 47 | F061006020001300 | 381 | 661 | 716 | 6.4 | 1.29 | 22.1 |
| | 2300 | 47 | F061006023001300 | 438 | 760 | 823 | 7.4 | 1.29 | 25.3 |
| | 2600 | 47 | F061006026001300 | 495 | 859 | 930 | 8.3 | 1.29 | 28.5 |
| | 3000 | 47 | F061006030001300 | 571 | 991 | 1073 | 9.6 | 1.29 | 32.7 |
| **Tüüp 20** | | | | | | | | | |
| | 400 | 102 | F062006004000300 | 130 | 225 | 243 | 2.6 | 1.29 | 9.2 |
| | 500 | 102 | F062006005000300 | 162 | 281 | 305 | 3.3 | 1.29 | 11.3 |
| | 600 | 102 | F062006006000300 | 195 | 337 | 365 | 4.0 | 1.29 | 13.4 |
| | 700 | 102 | F062006007000300 | 227 | 393 | 426 | 4.6 | 1.29 | 15.5 |
| | 800 | 102 | F062006008000300 | 260 | 450 | 487 | 5.3 | 1.29 | 17.6 |
| | 900 | 102 | F062006009000300 | 292 | 506 | 548 | 5.9 | 1.29 | 19.7 |
| | 1000 | 102 | F062006010000300 | 324 | 562 | 609 | 6.6 | 1.29 | 21.8 |
| | 1100 | 102 | F062006011000300 | 357 | 618 | 670 | 7.3 | 1.29 | 23.9 |

# 600

| KÕRGUS 600 mm | PIKKUS | SÜGAVUS | | Võimsus (W) 45/35/20°C | Võimsus (W) 55/45/20°C | Võimsus (W) 60/45/20°C | MAHT (l) | N-ekponent | KAAL (kg) |
|---|---|---|---|---|---|---|---|---|---|
| | 1200 | 102 | F062006012000300 | 389 | 674 | 730 | 7.9 | 1.29 | 26.3 |
| | 1400 | 102 | F062006014000300 | 454 | 787 | 852 | 9.2 | 1.29 | 3.2 |
| | 1600 | 102 | F062006016000300 | 519 | 899 | 974 | 10.6 | 1.29 | 34.4 |
| | 1800 | 102 | F062006018000300 | 584 | 1012 | 1096 | 11.9 | 1.29 | 38.6 |
| | 2000 | 102 | F062006020000300 | 649 | 1124 | 1217 | 13.2 | 1.29 | 42.8 |
| | 2300 | 102 | F062006023000300 | 746 | 1293 | 1400 | 15.2 | 1.29 | 49.9 |
| | 2600 | 102 | F062006026000300 | 843 | 1461 | 1583 | 17.2 | 1.29 | 55.4 |
| | 3000 | 102 | F062006030000300 | 973 | 1686 | 1826 | 19.8 | 1.29 | 63.8 |
| **Tüüp 30** | | | | | | | | | |
| | 400 | 152 | F063006004000300 | 177 | 309 | 335 | 3.9 | 1.31 | 12.3 |
| | 500 | 152 | F063006005000300 | 221 | 387 | 419 | 4.9 | 1.31 | 15.2 |
| | 600 | 152 | F063006006000300 | 265 | 464 | 503 | 5.9 | 1.31 | 18.4 |
| | 700 | 152 | F063006007000300 | 310 | 541 | 587 | 6.9 | 1.31 | 21.6 |
| | 800 | 152 | F063006008000300 | 354 | 619 | 671 | 7.8 | 1.31 | 24.6 |
| | 900 | 152 | F063006009000300 | 398 | 696 | 755 | 8.8 | 1.31 | 27.8 |
| | 1000 | 152 | F063006010000300 | 442 | 773 | 839 | 9.8 | 1.31 | 3.9 |
| | 1100 | 152 | F063006011000300 | 486 | 851 | 923 | 10.8 | 1.31 | 34.7 |
| | 1200 | 152 | F063006012000300 | 531 | 928 | 1006 | 11.8 | 1.31 | 37.2 |
| | 1400 | 152 | F063006014000300 | 619 | 1083 | 1174 | 13.7 | 1.31 | 43.5 |
| | 1600 | 152 | F063006016000300 | 707 | 1237 | 1342 | 15.7 | 1.31 | 49.8 |
| | 1800 | 152 | F063006018000300 | 796 | 1392 | 1510 | 17.6 | 1.31 | 56.6 |
| | 2000 | 152 | F063006020000300 | 884 | 1547 | 1677 | 19.6 | 1.31 | 62.3 |
| | 2300 | 152 | F063006023000300 | 1017 | 1779 | 1929 | 22.5 | 1.31 | 71.8 |
| | 2600 | 152 | F063006026000300 | 1150 | 2011 | 2180 | 25.5 | 1.31 | 81.2 |
| | 3000 | 152 | F063006030000300 | 1327 | 2320 | 2516 | 29.4 | 1.31 | 93.7 |

# 900

| KÕRGUS 900 mm | PIKKUS | SÜGAVUS | | Võimsus (W) 45/35/20°C | Võimsus (W) 55/45/20°C | Võimsus (W) 60/45/20°C | MAHT (l) | N-ekponent | KAAL (kg) |
|---|---|---|---|---|---|---|---|---|---|
| **Tüüp 10** | | | | | | | | | |
| | 400 | 47 | F061009004001300 | 107 | 186 | 201 | 1.8 | 1.30 | 6.8 |
| | 500 | 47 | F061009005001300 | 134 | 233 | 252 | 2.3 | 1.30 | 8.4 |
| | 600 | 47 | F061009006001300 | 160 | 279 | 303 | 2.7 | 1.30 | 10.1 |
| | 700 | 47 | F061009007001300 | 187 | 326 | 353 | 3.1 | 1.30 | 11.8 |
| | 800 | 47 | F061009008001300 | 214 | 372 | 403 | 3.6 | 1.30 | 13.5 |
| | 900 | 47 | F061009009001300 | 241 | 419 | 454 | 4.0 | 1.30 | 15.2 |
| | 1000 | 47 | F061009010001300 | 267 | 465 | 504 | 4.5 | 1.30 | 16.9 |
| | 1100 | 47 | F061009011001300 | 294 | 512 | 554 | 5.0 | 1.30 | 18.4 |
| | 1200 | 47 | F061009012001300 | 321 | 558 | 605 | 5.4 | 1.30 | 20.0 |
| | 1400 | 47 | F061009014001300 | 374 | 651 | 706 | 6.3 | 1.30 | 23.1 |
| | 1600 | 47 | F061009016001300 | 428 | 744 | 807 | 7.2 | 1.30 | 26.3 |
| | 1800 | 47 | F061009018001300 | 481 | 837 | 907 | 8.1 | 1.30 | 29.4 |
| | 2000 | 47 | F061009020001300 | 534 | 930 | 1008 | 9.0 | 1.30 | 32.6 |
| | 2300 | 47 | F061009023001300 | 614 | 1070 | 1159 | 10.3 | 1.30 | 37.3 |
| | 2600 | 47 | F061009026001300 | 695 | 1209 | 1311 | 11.7 | 1.30 | 42.0 |
| | 3000 | 47 | F061009030001300 | 801 | 1395 | 1512 | 13.5 | 1.30 | 48.3 |
| **Tüüp 20** | | | | | | | | | |
| | 400 | 102 | F062009004000300 | 179 | 311 | 338 | 3.6 | 1.30 | 12.4 |
| | 500 | 102 | F062009005000300 | 223 | 389 | 422 | 4.5 | 1.30 | 15.5 |
| | 600 | 102 | F062009006000300 | 268 | 467 | 506 | 5.4 | 1.30 | 18.6 |
| | 700 | 102 | F062009007000300 | 312 | 545 | 591 | 6.3 | 1.30 | 21.7 |
| | 800 | 102 | F062009008000300 | 357 | 623 | 675 | 7.2 | 1.30 | 24.8 |
| | 900 | 102 | F062009009000300 | 402 | 701 | 760 | 8.1 | 1.30 | 28.0 |
| | 1000 | 102 | F062009010000300 | 446 | 779 | 844 | 9.0 | 1.30 | 31.7 |
| | 1100 | 102 | F062009011000300 | 491 | 857 | 928 | 9.9 | 1.30 | 34.2 |

# 900

| KÕRGUS 900 mm | PIKKUS | SÜGAVUS | | Võimsus (W) 45/35/20°C | Võimsus (W) 55/45/20°C | Võimsus (W) 60/45/20°C | MAHT (l) | N-ekponent | KAAL (kg) |
|---|---|---|---|---|---|---|---|---|---|
| | 1200 | 102 | F062009012000300 | 536 | 934 | 1013 | 10.8 | 1.30 | 37.3 |
| | 1400 | 102 | F062009014000300 | 625 | 1090 | 1182 | 12.6 | 1.30 | 43.5 |
| | 1600 | 102 | F062009016000300 | 714 | 1246 | 1350 | 14.4 | 1.30 | 49.8 |
| | 1800 | 102 | F062009018000300 | 803 | 1402 | 1519 | 16.2 | 1.30 | 55.9 |
| | 2000 | 102 | F062009020000300 | 893 | 1557 | 1688 | 18.0 | 1.30 | 62.1 |
| | 2300 | 102 | F062009023000300 | 1027 | 1791 | 1941 | 20.7 | 1.30 | 71.4 |
| | 2600 | 102 | F062009026000300 | 1161 | 2025 | 2194 | 23.4 | 1.30 | 8.8 |
| | 3000 | 102 | F062009030000300 | 1339 | 2336 | 2532 | 27.0 | 1.30 | 93.2 |
| **Tüüp 30** | | | | | | | | | |
| | 400 | 152 | F063009004000300 | 235 | 417 | 453 | 5.3 | 1.34 | 16.3 |
| | 500 | 152 | F063009005000300 | 294 | 521 | 566 | 6.7 | 1.34 | 2.9 |
| | 600 | 152 | F063009006000300 | 353 | 626 | 680 | 8.0 | 1.34 | 25.5 |
| | 700 | 152 | F063009007000300 | 412 | 730 | 793 | 9.3 | 1.34 | 3.2 |
| | 800 | 152 | F063009008000300 | 470 | 834 | 906 | 10.6 | 1.34 | 34.8 |
| | 900 | 152 | F063009009000300 | 529 | 938 | 1019 | 12.0 | 1.34 | 39.5 |
| | 1000 | 152 | F063009010000300 | 588 | 1043 | 1133 | 13.3 | 1.34 | 44.5 |
| | 1100 | 152 | F063009011000300 | 647 | 1147 | 1246 | 14.6 | 1.34 | 48.7 |
| | 1200 | 152 | F063009012000300 | 706 | 1251 | 1359 | 16.0 | 1.34 | 53.4 |
| | 1400 | 152 | F063009014000300 | 823 | 1460 | 1586 | 18.6 | 1.34 | 62.5 |
| | 1600 | 152 | F063009016000300 | 941 | 1668 | 1812 | 21.3 | 1.34 | 71.8 |
| | 1800 | 152 | F063009018000300 | 1059 | 1877 | 2039 | 23.9 | 1.34 | 81.7 |
| | 2000 | 152 | F063009020000300 | 1176 | 2085 | 2265 | 26.6 | 1.34 | 9.3 |
| | 2300 | 152 | F063009023000300 | 1353 | 2398 | 2605 | 30.6 | 1.34 | 106.2 |
| | 2600 | 152 | F063009026000300 | 1529 | 2711 | 2945 | 34.6 | 1.34 | 118.8 |
| | 3000 | 152 | F063009030000300 | 1764 | 3128 | 3398 | 39.9 | 1.34 | 136.6 |