**Duomenų lapas**
2026-11-17

# Plan Hygiene (FH)

Plokštelinis radiatorius su lygiu priekiniu skydu, atitinkantis higienos reikalavimus.



- Lengvai valomas
- Aukšti higienos reikalavimai
- Tvirta konstrukcija
- Efektyvus šildymas
- Estetiškas dizainas

Plan Hygiene plokščiasis radiatorius su visiškai lygiu priekiniu paviršiumi, vienodai priklijuotu prie šilumokaičio, be matomų kraštų, skirtas sveikatos priežiūros ir švarioms patalpoms; be konvekcinių elementų ir grotelių, komplekte kamštis ir nuorinimo vožtuvas, RAL 9016.

**Pritaikymo sritis**
Plan Hygiene tinka higienos patalpoms — ligoninėms, klinikoms. Atvira ir lygi konstrukcija, lengva valyti, neleidžia kauptis dulkėms.

**Matmenų parinkimas**
Norint užtikrinti teisingą produktų pasirinkimą, prašome naudoti mūsų skaičiavimo įrankius ir produktų bukletus. Jei reikia pagalbos, susisiekite su mūsų pardavimo komanda.

**Naudojimas**
Plan Hygiene radiatorių montuok pagal standartines hidraulines praktikas, užtikrindamas, kad gaminio etiketė būtų nukreipta į sieną; kasdienė priežiūra apima paviršiaus valymą patvirtintomis valymo priemonėmis ir atsargų elgesį, kad nepažeistum lygios dangos; įsitikink, kad radiatorius veikia nustatytose slėgio ir temperatūros ribose ir atlik reguliarias patikras.

**AMA tekstas**
Plan Hygiene plokštelinis radiatorius su visiškai lygiu priekiniu paviršiumi, priklijuotu prie profilio be matomų kraštų. Be konvektorių, šoninių panelių ir viršutinės grotelės – higieniškai reiklioms zonoms. Keturi G 1/2" šoniniai prijungimai montavimui iš bet kurios pusės. Atitinka EN442-1 ir turi CE. Komplekte kamštis ir nuorinimo vožtuvas. Standartas RAL 9016; kiti tonai pagal užsakymą. Garantija 10 metų.

# Specifikacijos

| SAVYBĖS | VIENETAS | REIKŠMĖS |
|---|---|---|
| ETIM klasė | | EC011022 |
| Medžiaga | | Plienas |
| Tipas | | 10, 20, 30 |
| Paviršiaus struktūra | | Lygus sklandus |
| Maks. darbinis slėgis | bar | 10 |
| Standartinių jungčių skaičius | | 4 |
| Šilumos atidavimas pagal pripažintą EN 442 laboratoriją | | Taip |
| Maksimali veikimo temperatūra | °C | 110 |
| Standartinė spalva | | Taip |
| Spalva | | Baltas |
| RAL numeris | | 9016 |
| Grotelės/Dangtelių plokštė | | Taip |
| Grotelės/Dangtelių plokštė | | Taip |
| Blizgesio vertė | | Blizgus |
| Srieginis matmuo (coliai) | | 1/2 colio |
| Jungties sriegis | | Vidinis sriegis |
| Su vieno taško jungtimi | | Taip |
| Su oro išleidimo jungtimi | | Taip |
| Su oro išleidimo vožtuvu/nuorintuvu | | Taip |
| Su išleidimo galimybe | | Taip |

# Ištekliai



ProductImage - Panel radiator Plan Hygiene, FH.

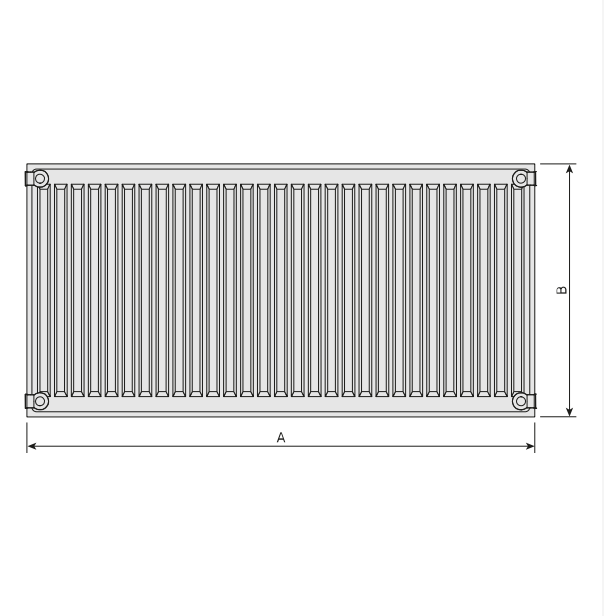


DimensionalDrawing - Plan Hygiene, vaizdas iš galo

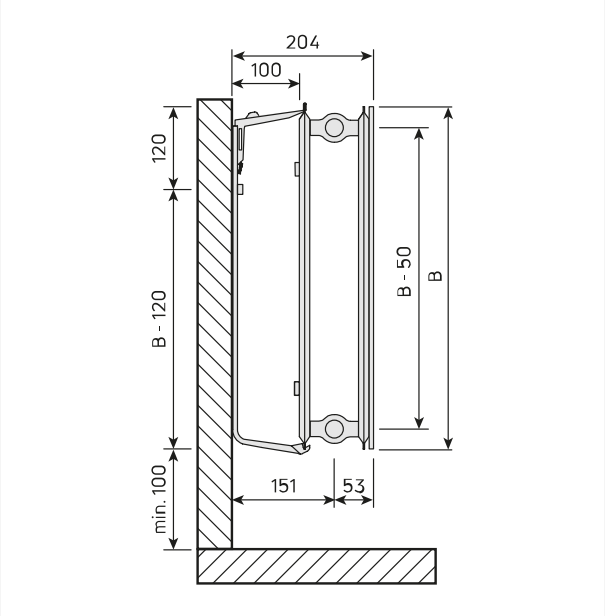


DimensionalDrawing - Plan Hygiene, tipas 20, vaizdas iš šono

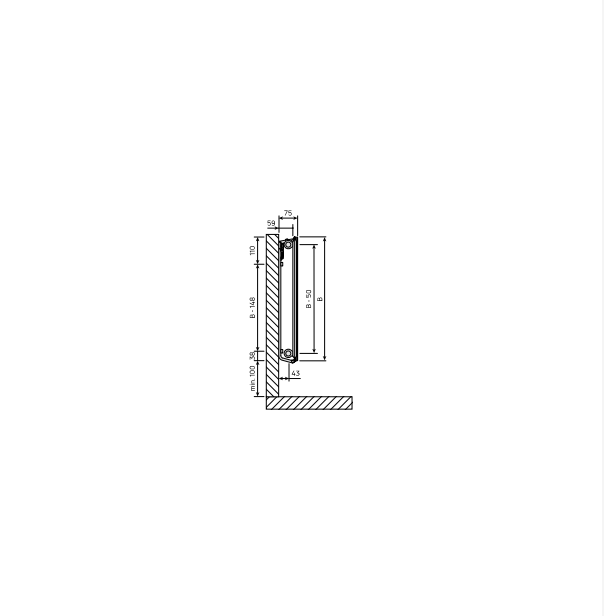

DimensionalDrawing - Plan Hygiene, tipas 10, vaizdas iš šono, MCK

# Ištekliai

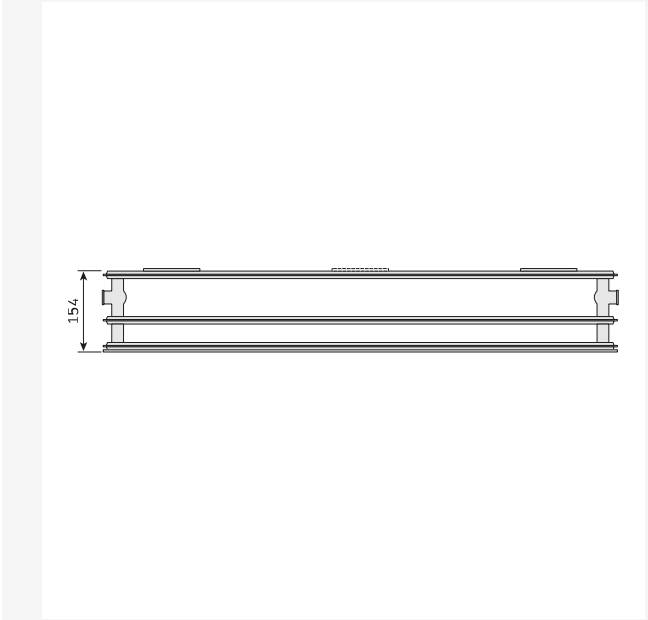


DimensionalDrawing - Plan Hygiene, tipas 30, vaizdas iš viršaus

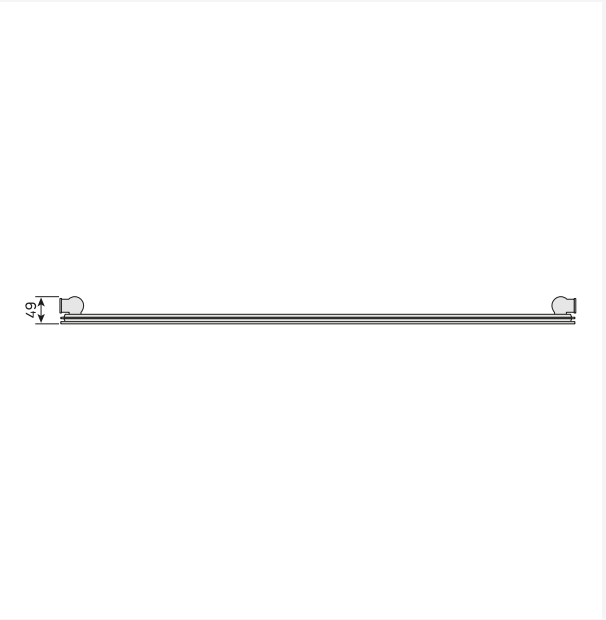


DimensionalDrawing - Plan Hygiene, tipas 10, vaizdas iš viršaus

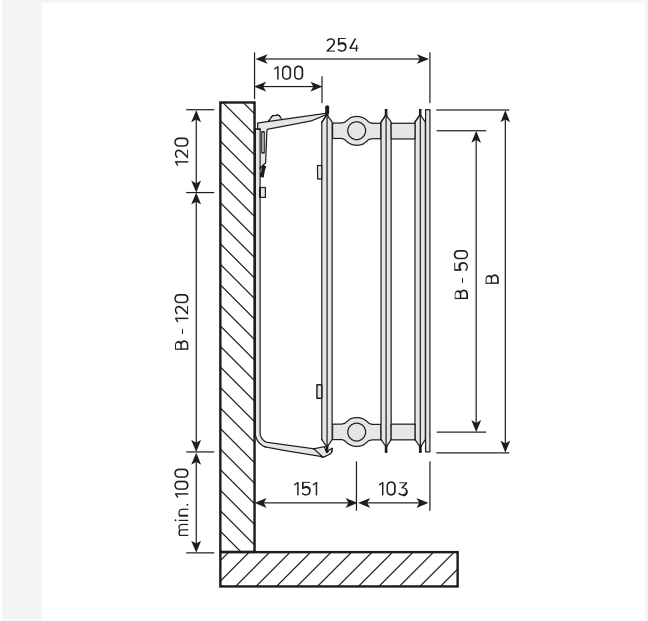


DimensionalDrawing - Plan Hygiene, tipas 30, vaizdas iš šono

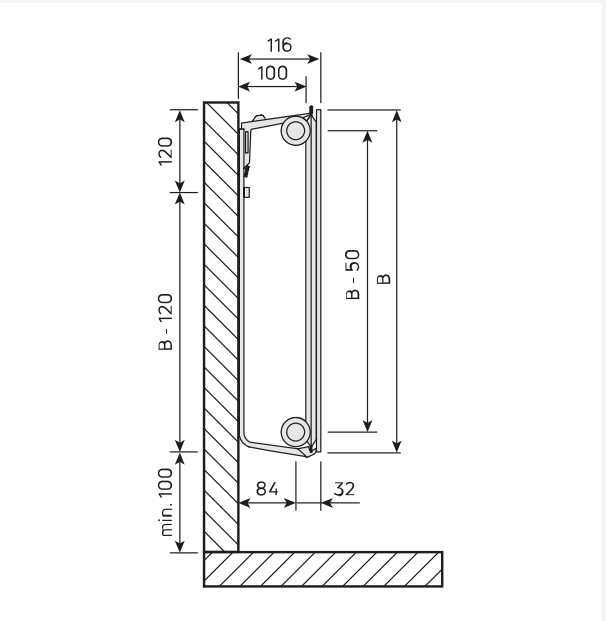


DimensionalDrawing - Plan Hygiene, tipas 10, vaizdas iš šono

# Ištekliai

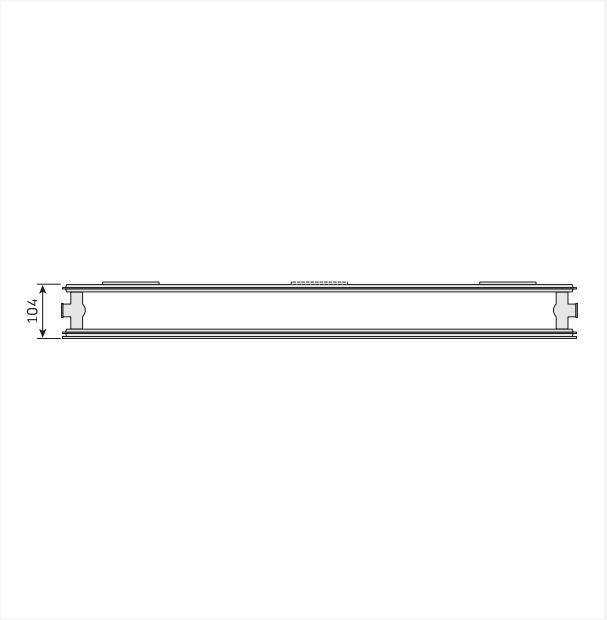


DimensionalDrawing - Plan Hygiene, tipas 20, vaizdas iš viršaus

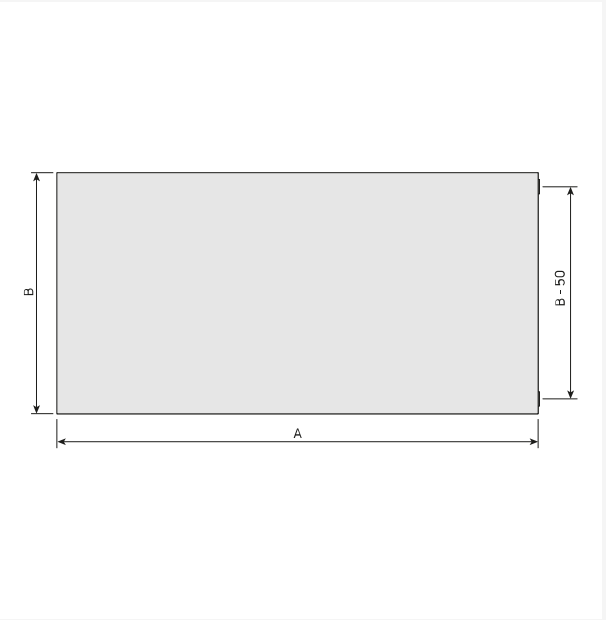


DimensionalDrawing - Plan Hygiene, vaizdas iš priekio

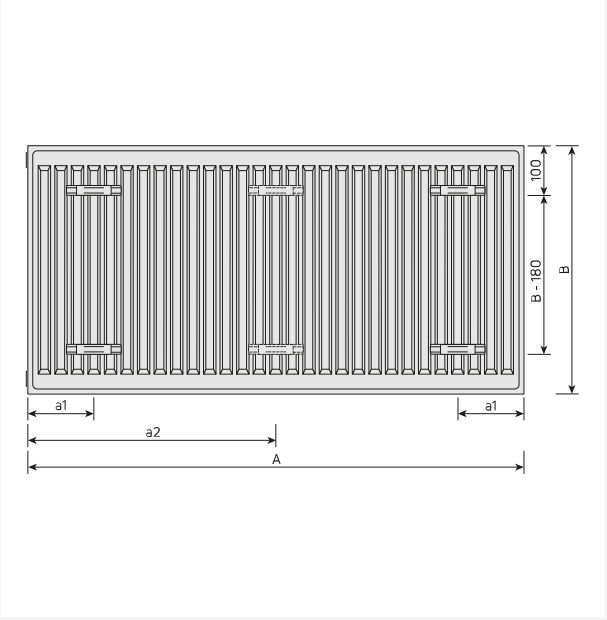


DimensionalDrawing - Plan Hygiene, vaizdas iš galo

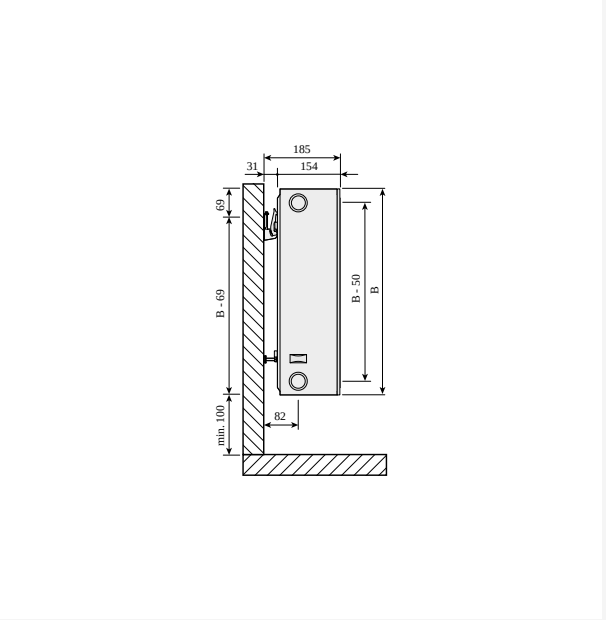


DimensionalDrawing - Plan Compact, Ramo Compact, tipas 33, vaizdas iš šono SSMS

# Ištekliai

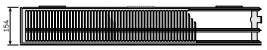

DimensionalDrawing - Hygiene Plan Compact, tipas 30, vaizdas iš viršaus

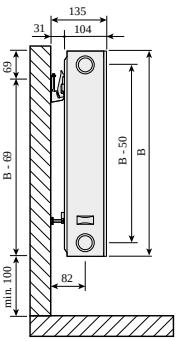


DimensionalDrawing - Plan Compact / Ramo Compact, tipas 22, vaizdas iš šono su SSMS sieniniais laikikliais



DimensionalDrawing - Hygiene Plan Compact, tipas 20, vaizdas iš viršaus

# Susiję produktai



Top Grill ©




Remontiniai dažai - purškiami



Šoninis panelis ©

# 300

| AUKŠTIS 300 mm | ILGIS | GYLIS | | Galia (W) 45/35/20°C | Galia (W) 55/45/20°C | Galia (W) 60/45/20°C | TŪRIS (l) | N-eksponentas | SVORIS (kg) |
|---|---|---|---|---|---|---|---|---|---|
| **Tipas 10** | | | | | | | | | |
| | 400 | 49 | F091003004001300 | 37 | 64 | 70 | 0.7 | 1.31 | 4.4 |
| | 500 | 49 | F091003005001300 | 46 | 80 | 87 | 0.8 | 1.31 | 5.3 |
| | 600 | 49 | F091003006001300 | 55 | 96 | 105 | 1.0 | 1.31 | 6.2 |
| | 700 | 49 | F091003007001300 | 64 | 112 | 122 | 1.2 | 1.31 | 7.0 |
| | 800 | 49 | F091003008001300 | 73 | 128 | 139 | 1.4 | 1.31 | 7.9 |
| | 900 | 49 | F091003009001300 | 83 | 144 | 157 | 1.5 | 1.31 | 8.7 |
| | 1000 | 49 | F091003010001300 | 92 | 161 | 174 | 1.7 | 1.31 | 9.6 |
| | 1100 | 49 | F091003011001300 | 101 | 177 | 191 | 1.9 | 1.31 | 10.4 |
| | 1200 | 49 | F091003012001300 | 110 | 193 | 209 | 2.0 | 1.31 | 11.2 |
| | 1400 | 49 | F091003014001300 | 129 | 225 | 244 | 2.4 | 1.31 | 12.9 |
| | 1600 | 49 | F091003016001300 | 147 | 257 | 279 | 2.7 | 1.31 | 14.6 |
| | 1800 | 49 | F091003018001300 | 165 | 289 | 313 | 3.1 | 1.31 | 16.3 |
| | 2000 | 49 | F091003020001300 | 184 | 321 | 348 | 3.4 | 1.31 | 18.0 |
| | 2300 | 49 | F091003023001300 | 211 | 369 | 400 | 3.9 | 1.31 | 21.0 |
| | 2600 | 49 | F091003026001300 | 239 | 417 | 453 | 4.4 | 1.31 | 23.6 |
| | 3000 | 49 | F091003030001300 | 276 | 482 | 522 | 5.1 | 1.31 | 27.1 |
| **Tipas 20** | | | | | | | | | |
| | 400 | 104 | F092003004000300 | 73 | 125 | 135 | 1.4 | 1.27 | 6.1 |
| | 500 | 104 | F092003005000300 | 91 | 156 | 169 | 1.7 | 1.27 | 7.5 |
| | 600 | 104 | F092003006000300 | 109 | 187 | 203 | 2.0 | 1.27 | 8.8 |
| | 700 | 104 | F092003007000300 | 127 | 219 | 237 | 2.4 | 1.27 | 1.1 |
| | 800 | 104 | F092003008000300 | 145 | 250 | 270 | 2.7 | 1.27 | 11.5 |
| | 900 | 104 | F092003009000300 | 164 | 281 | 304 | 3.1 | 1.27 | 12.8 |
| | 1000 | 104 | F092003010000300 | 182 | 312 | 338 | 3.4 | 1.27 | 14.1 |

# 300

| AUKŠTIS 300 mm | ILGIS | GYLIS | | Galia (W) 45/35/20°C | Galia (W) 55/45/20°C | Galia (W) 60/45/20°C | TŪRIS (l) | N-eksponentas | SVORIS (kg) |
|---|---|---|---|---|---|---|---|---|---|
| | 1100 | 104 | F092003011000300 | 200 | 344 | 372 | 3.7 | 1.27 | 15.5 |
| | 1200 | 104 | F092003012000300 | 218 | 375 | 406 | 4.1 | 1.27 | 16.8 |
| | 1400 | 104 | F092003014000300 | 254 | 437 | 473 | 4.8 | 1.27 | 19.4 |
| | 1600 | 104 | F092003016000300 | 291 | 500 | 541 | 5.4 | 1.27 | 22.5 |
| | 1800 | 104 | F092003018000300 | 327 | 562 | 608 | 6.1 | 1.27 | 24.7 |
| | 2000 | 104 | F092003020000300 | 363 | 625 | 676 | 6.8 | 1.27 | 27.5 |
| | 2300 | 104 | F092003023000300 | 418 | 719 | 777 | 7.8 | 1.27 | 31.4 |
| | 2600 | 104 | F092003026000300 | 472 | 812 | 879 | 8.8 | 1.27 | 35.4 |
| | 3000 | 104 | F092003030000300 | 545 | 937 | 1014 | 10.2 | 1.27 | 4.8 |
| **Tipas 30** | | | | | | | | | |
| | 400 | 154 | F093003004000300 | 99 | 172 | 187 | 2.0 | 1.29 | 7.7 |
| | 500 | 154 | F093003005000300 | 124 | 215 | 233 | 2.5 | 1.29 | 9.5 |
| | 600 | 154 | F093003006000300 | 149 | 259 | 280 | 3.1 | 1.29 | 11.4 |
| | 700 | 154 | F093003007000300 | 174 | 302 | 327 | 3.6 | 1.29 | 13.2 |
| | 800 | 154 | F093003008000300 | 199 | 345 | 373 | 4.1 | 1.29 | 15.1 |
| | 900 | 154 | F093003009000300 | 223 | 388 | 420 | 4.6 | 1.29 | 16.9 |
| | 1000 | 154 | F093003010000300 | 248 | 431 | 467 | 5.1 | 1.29 | 18.9 |
| | 1100 | 154 | F093003011000300 | 273 | 474 | 513 | 5.6 | 1.29 | 2.7 |
| | 1200 | 154 | F093003012000300 | 298 | 517 | 560 | 6.1 | 1.29 | 22.6 |
| | 1400 | 154 | F093003014000300 | 348 | 603 | 653 | 7.1 | 1.29 | 26.2 |
| | 1600 | 154 | F093003016000300 | 397 | 689 | 747 | 8.2 | 1.29 | 29.9 |
| | 1800 | 154 | F093003018000300 | 447 | 776 | 840 | 9.2 | 1.29 | 33.6 |
| | 2000 | 154 | F093003020000300 | 496 | 862 | 933 | 10.2 | 1.29 | 37.3 |
| | 2300 | 154 | F093003023000300 | 571 | 991 | 1073 | 11.7 | 1.29 | 42.8 |
| | 2600 | 154 | F093003026000300 | 645 | 1120 | 1213 | 13.3 | 1.29 | 48.4 |
| | 3000 | 154 | F093003030000300 | 745 | 1293 | 1400 | 15.3 | 1.29 | 55.8 |

# 400

| AUKŠTIS 400 mm | ILGIS | GYLIS | | Galia (W) 45/35/20°C | Galia (W) 55/45/20°C | Galia (W) 60/45/20°C | TŪRIS (l) | N-eksponentas | SVORIS (kg) |
|---|---|---|---|---|---|---|---|---|---|
| **Tipas 10** | | | | | | | | | |
| | 400 | 49 | F091004004001300 | 49 | 85 | 92 | 0.9 | 1.29 | 5.5 |
| | 500 | 49 | F091004005001300 | 61 | 106 | 115 | 1.1 | 1.29 | 6.7 |
| | 600 | 49 | F091004006001300 | 73 | 128 | 138 | 1.3 | 1.29 | 7.8 |
| | 700 | 49 | F091004007001300 | 86 | 149 | 161 | 1.5 | 1.29 | 9.0 |
| | 800 | 49 | F091004008001300 | 98 | 170 | 185 | 1.8 | 1.29 | 10.1 |
| | 900 | 49 | F091004009001300 | 110 | 192 | 208 | 2.0 | 1.29 | 11.2 |
| | 1000 | 49 | F091004010001300 | 123 | 213 | 231 | 2.2 | 1.29 | 12.3 |
| | 1100 | 49 | F091004011001300 | 135 | 234 | 253 | 2.4 | 1.29 | 13.5 |
| | 1200 | 49 | F091004012001300 | 147 | 255 | 276 | 2.6 | 1.29 | 14.6 |
| | 1400 | 49 | F091004014001300 | 172 | 298 | 323 | 3.1 | 1.29 | 16.9 |
| | 1600 | 49 | F091004016001300 | 196 | 341 | 369 | 3.5 | 1.29 | 19.1 |
| | 1800 | 49 | F091004018001300 | 221 | 383 | 415 | 4.0 | 1.29 | 21.4 |
| | 2000 | 49 | F091004020001300 | 245 | 426 | 461 | 4.4 | 1.29 | 23.7 |
| | 2300 | 47 | F091004023001300 | -- | 489 | -- | 0.0 | 1.29 | 0.0 |
| | 2600 | 47 | F091004026001300 | -- | 553 | -- | 0.0 | 1.29 | 0.0 |
| | 3000 | 47 | F091004030001300 | -- | 638 | -- | 0.0 | 1.29 | 0.0 |

# 500

| AUKŠTIS 500 mm | ILGIS | GYLIS | | Galia (W) 45/35/20°C | Galia (W) 55/45/20°C | Galia (W) 60/45/20°C | TŪRIS (l) | N-eksponentas | SVORIS (kg) |
|---|---|---|---|---|---|---|---|---|---|
| **Tipas 10** | | | | | | | | | |
| | 400 | 49 | F091005004001300 | 61 | 105 | 114 | 1.1 | 1.28 | 6.5 |
| | 500 | 49 | F091005005001300 | 76 | 131 | 142 | 1.4 | 1.28 | 8.0 |
| | 600 | 49 | F091005006001300 | 91 | 158 | 171 | 1.6 | 1.28 | 9.5 |
| | 700 | 49 | F091005007001300 | 107 | 184 | 199 | 1.9 | 1.28 | 10.9 |
| | 800 | 49 | F091005008001300 | 122 | 210 | 228 | 2.2 | 1.28 | 12.3 |
| | 900 | 49 | F091005009001300 | 137 | 236 | 256 | 2.4 | 1.28 | 13.7 |
| | 1000 | 49 | F091005010001300 | 152 | 263 | 284 | 2.7 | 1.28 | 15.1 |
| | 1100 | 49 | F091005011001300 | 168 | 289 | 313 | 3.0 | 1.28 | 16.5 |
| | 1200 | 49 | F091005012001300 | 183 | 315 | 341 | 3.2 | 1.28 | 17.9 |
| | 1400 | 49 | F091005014001300 | 213 | 368 | 398 | 3.8 | 1.28 | 20.6 |
| | 1600 | 49 | F091005016001300 | 244 | 420 | 455 | 4.3 | 1.28 | 23.4 |
| | 1800 | 49 | F091005018001300 | 274 | 473 | 512 | 4.9 | 1.28 | 26.1 |
| | 2000 | 49 | F091005020001300 | 304 | 526 | 569 | 5.4 | 1.28 | 28.9 |
| | 2300 | 49 | F091005023001300 | 350 | 604 | 654 | 6.2 | 1.28 | 34.5 |
| | 2600 | 49 | F091005026001300 | 396 | 683 | 739 | 7.0 | 1.28 | 38.9 |
| | 3000 | 49 | F091005030001300 | 457 | 788 | 853 | 8.1 | 1.28 | 44.8 |
| **Tipas 20** | | | | | | | | | |
| | 400 | 104 | F092005004000300 | 106 | 183 | 198 | 2.2 | 1.28 | 9.3 |
| | 500 | 104 | F092005005000300 | 132 | 229 | 248 | 2.8 | 1.28 | 11.5 |
| | 600 | 104 | F092005006000300 | 159 | 274 | 297 | 3.3 | 1.28 | 13.7 |
| | 700 | 104 | F092005007000300 | 185 | 320 | 347 | 3.9 | 1.28 | 15.8 |
| | 800 | 104 | F092005008000300 | 212 | 366 | 396 | 4.4 | 1.28 | 18.0 |
| | 900 | 104 | F092005009000300 | 238 | 412 | 446 | 5.0 | 1.28 | 2.2 |
| | 1000 | 104 | F092005010000300 | 265 | 457 | 495 | 5.5 | 1.28 | 22.3 |
| | 1100 | 104 | F092005011000300 | 291 | 503 | 545 | 6.0 | 1.28 | 24.5 |

# 500

| AUKŠTIS 500 mm | ILGIS | GYLIS | | Galia (W) 45/35/20°C | Galia (W) 55/45/20°C | Galia (W) 60/45/20°C | TŪRIS (l) | N-eksponentas | SVORIS (kg) |
|---|---|---|---|---|---|---|---|---|---|
| | 1200 | 104 | F092005012000300 | 318 | 549 | 594 | 6.6 | 1.28 | 26.7 |
| | 1400 | 104 | F092005014000300 | 371 | 640 | 693 | 7.7 | 1.28 | 31.1 |
| | 1600 | 104 | F092005016000300 | 424 | 732 | 792 | 8.8 | 1.28 | 35.3 |
| | 1800 | 104 | F092005018000300 | 477 | 823 | 891 | 9.9 | 1.28 | 39.7 |
| | 2000 | 104 | F092005020000300 | 530 | 915 | 990 | 11.0 | 1.28 | 44.1 |
| | 2300 | 104 | F092005023000300 | 609 | 1052 | 1139 | 12.7 | 1.28 | 5.5 |
| | 2600 | 104 | F092005026000300 | 689 | 1189 | 1287 | 14.3 | 1.28 | 57.5 |
| | 3000 | 104 | F092005030000300 | 794 | 1372 | 1485 | 16.5 | 1.28 | 65.7 |
| **Tipas 30** | | | | | | | | | |
| | 400 | 154 | F093005004000300 | 144 | 251 | 272 | 3.3 | 1.30 | 11.7 |
| | 500 | 154 | F093005005000300 | 180 | 313 | 340 | 4.1 | 1.30 | 14.8 |
| | 600 | 154 | F093005006000300 | 216 | 376 | 408 | 4.9 | 1.30 | 17.8 |
| | 700 | 154 | F093005007000300 | 252 | 439 | 475 | 5.7 | 1.30 | 2.8 |
| | 800 | 154 | F093005008000300 | 288 | 501 | 543 | 6.6 | 1.30 | 23.8 |
| | 900 | 154 | F093005009000300 | 324 | 564 | 611 | 7.4 | 1.30 | 26.9 |
| | 1000 | 154 | F093005010000300 | 360 | 627 | 679 | 8.2 | 1.30 | 30.0 |
| | 1100 | 154 | F093005011000300 | 396 | 689 | 747 | 9.0 | 1.30 | 32.9 |
| | 1200 | 154 | F093005012000300 | 431 | 752 | 815 | 9.8 | 1.30 | 36.0 |
| | 1400 | 154 | F093005014000300 | 503 | 877 | 951 | 11.5 | 1.30 | 42.0 |
| | 1600 | 154 | F093005016000300 | 575 | 1003 | 1087 | 13.1 | 1.30 | 48.5 |
| | 1800 | 154 | F093005018000300 | 647 | 1128 | 1223 | 14.8 | 1.30 | 54.9 |
| | 2000 | 154 | F093005020000300 | 719 | 1253 | 1358 | 16.4 | 1.30 | 6.2 |
| | 2300 | 154 | F093005023000300 | 827 | 1442 | 1562 | 18.9 | 1.30 | 69.3 |
| | 2600 | 154 | F093005026000300 | 935 | 1630 | 1766 | 21.3 | 1.30 | 78.3 |
| | 3000 | 154 | F093005030000300 | 1079 | 1880 | 2038 | 24.6 | 1.30 | 9.4 |

# 600

| AUKŠTIS 600 mm | ILGIS | GYLIS | | Galia (W) 45/35/20°C | Galia (W) 55/45/20°C | Galia (W) 60/45/20°C | TŪRIS (l) | N-eksponentas | SVORIS (kg) |
|---|---|---|---|---|---|---|---|---|---|
| **Tipas 10** | | | | | | | | | |
| | 400 | 49 | F091006004001300 | 72 | 124 | 134 | 1.3 | 1.26 | 8.0 |
| | 500 | 49 | F091006005001300 | 90 | 155 | 168 | 1.6 | 1.26 | 9.7 |
| | 600 | 49 | F091006006001300 | 108 | 186 | 201 | 1.9 | 1.26 | 11.4 |
| | 700 | 49 | F091006007001300 | 126 | 217 | 235 | 2.2 | 1.26 | 13.1 |
| | 800 | 49 | F091006008001300 | 145 | 248 | 269 | 2.6 | 1.26 | 14.8 |
| | 900 | 49 | F091006009001300 | 163 | 279 | 302 | 2.9 | 1.26 | 16.5 |
| | 1000 | 49 | F091006010001300 | 181 | 310 | 336 | 3.2 | 1.26 | 18.2 |
| | 1100 | 49 | F091006011001300 | 199 | 341 | 369 | 3.5 | 1.26 | 19.9 |
| | 1200 | 49 | F091006012001300 | 217 | 372 | 402 | 3.8 | 1.26 | 21.6 |
| | 1400 | 49 | F091006014001300 | 253 | 434 | 470 | 4.5 | 1.26 | 23.8 |
| | 1600 | 49 | F091006016001300 | 289 | 496 | 537 | 5.1 | 1.26 | 28.3 |
| | 1800 | 49 | F091006018001300 | 326 | 558 | 604 | 5.8 | 1.26 | 31.7 |
| | 2000 | 49 | F091006020001300 | 362 | 621 | 671 | 6.4 | 1.26 | 35.1 |
| | 2300 | 49 | F091006023001300 | 416 | 714 | 772 | 7.4 | 1.26 | 41.3 |
| | 2600 | 49 | F091006026001300 | 470 | 807 | 872 | 8.3 | 1.26 | 46.5 |
| | 3000 | 49 | F091006030001300 | 542 | 931 | 1007 | 9.6 | 1.26 | 53.5 |
| **Tipas 20** | | | | | | | | | |
| | 400 | 104 | F092006004000300 | 122 | 210 | 228 | 2.6 | 1.29 | 11.5 |
| | 500 | 104 | F092006005000300 | 152 | 263 | 285 | 3.3 | 1.29 | 14.2 |
| | 600 | 104 | F092006006000300 | 182 | 316 | 342 | 4.0 | 1.29 | 16.8 |
| | 700 | 104 | F092006007000300 | 213 | 368 | 399 | 4.6 | 1.29 | 19.5 |
| | 800 | 104 | F092006008000300 | 243 | 421 | 456 | 5.3 | 1.29 | 22.1 |
| | 900 | 104 | F092006009000300 | 274 | 474 | 513 | 5.9 | 1.29 | 24.8 |
| | 1000 | 104 | F092006010000300 | 304 | 526 | 570 | 6.6 | 1.29 | 27.4 |
| | 1100 | 104 | F092006011000300 | 334 | 579 | 627 | 7.3 | 1.29 | 3.9 |

# 600

| AUKŠTIS 600 mm | ILGIS | GYLIS | | Galia (W) 45/35/20°C | Galia (W) 55/45/20°C | Galia (W) 60/45/20°C | TŪRIS (l) | N-eksponentas | SVORIS (kg) |
|---|---|---|---|---|---|---|---|---|---|
| | 1200 | 104 | F092006012000300 | 365 | 631 | 684 | 7.9 | 1.29 | 32.7 |
| | 1400 | 104 | F092006014000300 | 426 | 737 | 798 | 9.2 | 1.29 | 38.4 |
| | 1600 | 104 | F092006016000300 | 486 | 842 | 911 | 10.6 | 1.29 | 43.3 |
| | 1800 | 104 | F092006018000300 | 547 | 947 | 1025 | 11.9 | 1.29 | 48.6 |
| | 2000 | 104 | F092006020000300 | 608 | 1052 | 1139 | 13.2 | 1.29 | 53.9 |
| | 2300 | 104 | F092006023000300 | 699 | 1210 | 1310 | 15.2 | 1.29 | 61.9 |
| | 2600 | 104 | F092006026000300 | 790 | 1368 | 1481 | 17.2 | 1.29 | 69.8 |
| | 3000 | 104 | F092006030000300 | 912 | 1579 | 1709 | 19.8 | 1.29 | 8.5 |
| **Tipas 30** | | | | | | | | | |
| | 400 | 154 | F093006004000300 | 164 | 287 | 311 | 3.9 | 1.31 | 14.4 |
| | 500 | 154 | F093006005000300 | 206 | 359 | 389 | 4.9 | 1.31 | 18.4 |
| | 600 | 154 | F093006006000300 | 247 | 431 | 467 | 5.9 | 1.31 | 21.8 |
| | 700 | 154 | F093006007000300 | 288 | 503 | 545 | 6.9 | 1.31 | 25.5 |
| | 800 | 154 | F093006008000300 | 329 | 574 | 623 | 7.8 | 1.31 | 29.2 |
| | 900 | 154 | F093006009000300 | 370 | 646 | 701 | 8.8 | 1.31 | 32.8 |
| | 1000 | 154 | F093006010000300 | 411 | 718 | 778 | 9.8 | 1.31 | 36.5 |
| | 1100 | 154 | F093006011000300 | 452 | 790 | 856 | 10.8 | 1.31 | 4.2 |
| | 1200 | 154 | F093006012000300 | 493 | 862 | 934 | 11.8 | 1.31 | 43.9 |
| | 1400 | 154 | F093006014000300 | 575 | 1005 | 1090 | 13.7 | 1.31 | 51.3 |
| | 1600 | 154 | F093006016000300 | 658 | 1149 | 1245 | 15.7 | 1.31 | 58.7 |
| | 1800 | 154 | F093006018000300 | 740 | 1292 | 1401 | 17.6 | 1.31 | 66.8 |
| | 2000 | 154 | F093006020000300 | 822 | 1436 | 1557 | 19.6 | 1.31 | 73.5 |
| | 2300 | 154 | F093006023000300 | 945 | 1651 | 1790 | 22.5 | 1.31 | 84.5 |
| | 2600 | 154 | F093006026000300 | 1069 | 1867 | 2024 | 25.5 | 1.31 | 95.6 |
| | 3000 | 154 | F093006030000300 | 1233 | 2154 | 2335 | 29.4 | 1.31 | 11.4 |

# 900

| AUKŠTIS 900 mm | ILGIS | GYLIS | | Galia (W) 45/35/20°C | Galia (W) 55/45/20°C | Galia (W) 60/45/20°C | TŪRIS (l) | N-eksponentas | SVORIS (kg) |
|---|---|---|---|---|---|---|---|---|---|
| **Tipas 10** | | | | | | | | | |
| | 400 | 49 | F091009004001300 | 99 | 171 | 185 | 1.8 | 1.28 | 11.3 |
| | 500 | 49 | F091009005001300 | 124 | 214 | 231 | 2.3 | 1.28 | 13.8 |
| | 600 | 49 | F091009006001300 | 149 | 256 | 277 | 2.7 | 1.28 | 16.3 |
| | 700 | 49 | F091009007001300 | 173 | 299 | 324 | 3.1 | 1.28 | 18.9 |
| | 800 | 49 | F091009008001300 | 198 | 342 | 370 | 3.6 | 1.28 | 21.4 |
| | 900 | 49 | F091009009001300 | 223 | 384 | 416 | 4.0 | 1.28 | 23.9 |
| | 1000 | 49 | F091009010001300 | 248 | 427 | 462 | 4.5 | 1.28 | 26.4 |
| | 1100 | 49 | F091009011001300 | 272 | 470 | 508 | 5.0 | 1.28 | 29.0 |
| | 1200 | 49 | F091009012001300 | 297 | 513 | 555 | 5.4 | 1.28 | 31.5 |
| | 1400 | 49 | F091009014001300 | 347 | 598 | 647 | 6.3 | 1.28 | 36.5 |
| | 1600 | 49 | F091009016001300 | 396 | 683 | 740 | 7.2 | 1.28 | 41.6 |
| | 1800 | 49 | F091009018001300 | 446 | 769 | 832 | 8.1 | 1.28 | 46.6 |
| | 2000 | 49 | F091009020001300 | 495 | 854 | 924 | 9.0 | 1.28 | 51.7 |
| | 2300 | 49 | F091009023001300 | 570 | 982 | 1063 | 10.3 | 1.28 | 0.0 |
| | 2600 | 49 | F091009026001300 | -- | 1110 | -- | 0.0 | 1.28 | 0.0 |
| | 3000 | 49 | F091009030001300 | -- | 1281 | -- | 0.0 | 1.28 | 0.0 |
| **Tipas 20** | | | | | | | | | |
| | 400 | 104 | F092009004000300 | 171 | 295 | 319 | 3.6 | 1.27 | 15.9 |
| | 500 | 104 | F092009005000300 | 214 | 368 | 398 | 4.5 | 1.27 | 19.8 |
| | 600 | 104 | F092009006000300 | 257 | 442 | 478 | 5.4 | 1.27 | 23.7 |
| | 700 | 104 | F092009007000300 | 299 | 516 | 558 | 6.3 | 1.27 | 27.6 |
| | 800 | 104 | F092009008000300 | 342 | 589 | 637 | 7.2 | 1.27 | 31.6 |
| | 900 | 104 | F092009009000300 | 385 | 663 | 717 | 8.1 | 1.27 | 35.5 |
| | 1000 | 104 | F092009010000300 | 428 | 736 | 797 | 9.0 | 1.27 | 39.4 |
| | 1100 | 104 | F092009011000300 | 471 | 810 | 876 | 9.9 | 1.27 | 43.4 |

# 900

| AUKŠTIS 900 mm | ILGIS | GYLIS | | Galia (W) 45/35/20°C | Galia (W) 55/45/20°C | Galia (W) 60/45/20°C | TŪRIS (l) | N-eksponentas | SVORIS (kg) |
|---|---|---|---|---|---|---|---|---|---|
| | 1200 | 104 | F092009012000300 | 513 | 884 | 956 | 10.8 | 1.27 | 47.3 |
| | 1400 | 104 | F092009014000300 | 599 | 1031 | 1115 | 12.6 | 1.27 | 55.1 |
| | 1600 | 104 | F092009016000300 | 685 | 1178 | 1275 | 14.4 | 1.27 | 63.0 |
| | 1800 | 104 | F092009018000300 | 770 | 1326 | 1434 | 16.2 | 1.27 | 7.8 |
| | 2000 | 104 | F092009020000300 | 856 | 1473 | 1593 | 18.0 | 1.27 | 78.7 |
| **Tipas 30** | | | | | | | | | |
| | 400 | 154 | F093009004000300 | 225 | 394 | 427 | 5.3 | 1.32 | 19.7 |
| | 500 | 154 | F093009005000300 | 281 | 492 | 534 | 6.7 | 1.32 | 25.1 |
| | 600 | 154 | F093009006000300 | 337 | 591 | 640 | 8.0 | 1.32 | 3.6 |
| | 700 | 154 | F093009007000300 | 393 | 689 | 747 | 9.3 | 1.32 | 36.5 |
| | 800 | 154 | F093009008000300 | 449 | 787 | 854 | 10.6 | 1.32 | 41.5 |
| | 900 | 154 | F093009009000300 | 505 | 886 | 961 | 12.0 | 1.32 | 46.9 |
| | 1000 | 154 | F093009010000300 | 561 | 984 | 1067 | 13.3 | 1.32 | 52.4 |
| | 1100 | 154 | F093009011000300 | 618 | 1083 | 1174 | 14.6 | 1.32 | 57.9 |
| | 1200 | 154 | F093009012000300 | 674 | 1181 | 1281 | 16.0 | 1.32 | 63.3 |
| | 1400 | 154 | F093009014000300 | 786 | 1378 | 1494 | 18.6 | 1.32 | 74.2 |
| | 1600 | 154 | F093009016000300 | 898 | 1575 | 1708 | 21.3 | 1.32 | 85.7 |
| | 1800 | 154 | F093009018000300 | 1011 | 1772 | 1921 | 23.9 | 1.32 | 96.0 |
| | 2000 | 154 | F093009020000300 | 1123 | 1968 | 2135 | 26.6 | 1.32 | 109.0 |