Datu lapa
2026-10-11

Plan Ventil Hygiene (FHV)

Higiēnisks paneļu radiators ar plakanu priekšpusi un apakšējo pieslēgumu.

- Higiēniska konstrukcija
- Izturīga konstrukcija
- Augsts darba spiediens
- Plaša izmēru izvēle
- Vienkārša uzstādīšana

Plan Ventil Hygiene paneļu radiators ar pilnīgi gludu priekšējo plātni, bez sānu un augšējām restēm, īpaši piemērots telpām ar paaugstinātām higiēnas prasībām; iespējams pieslēgums no apakšas vai sāniem; standarta tonis RAL 9016.

Pielietojuma joma
Plan Ventil Hygiene paredzēts vidiem ar augstām higiēnas prasībām, piemēram, slimnīcām, laboratorijām un tīrtelpām. Izgatavots no auksti velmēta tērauda, ar darba spiedienu līdz 10 bar. Pieejams augstumos no 300 līdz 3000 mm. Bez konvekcijas ribām, viegli tīrāms, bez augšējās restes un sānu paneļiem.

Dimensiju noteikšana
Lai nodrošinātu pareizu produktu izvēli, lūdzu, izmantojiet mūsu kalkulatoru rīkus un produktu bukletus. Ja nepieciešama palīdzība, sazinieties ar mūsu pārdošanas komandu.

Lietošana
Plan Ventil Hygiene jāuzstāda ar komplektā esošajiem montāžas kronšteiniem, kas atbilst ierīces izmēram, un visiem savienojumiem jābūt hermētiski noslēgtiem, ievērojot ekspluatācijas ierobežojumus; regulāri tīri gludo virsmu un malas ar neabrazīvu drānu higiēnas uzturēšanai un izvairies no spēcīgiem tīrīšanas līdzekļiem; pārbaudi, vai nav aizsprostojumu un nodrošini brīvu piekļuvi apkārt radiatoram efektīvai siltuma apmaiņai.

AMA teksts
Plan Ventil Hygiene radiators paredzēts higiēniski prasīgām telpām, tostarp medicīnas iestādēm un tīrajām telpām. Izgatavots no auksti velmēta tērauda ar gludu virsmu bez konvektoriem un bez sānu/augšējiem paneļiem, kas atvieglo tīrīšanu. Pieejams 300–3000 mm augstumā. Darba spiediens līdz 10 bar.
Epoksīda-poliestera pārklājums nodrošina izturību pret tīrīšanas līdzekļiem. Komplektā stiprinājumi. Standarta pārklājums RAL 9016.

Specifikācijas

ĪPAŠĪBAS	VIENĪBA	VĒRTĪBAS
ETIM klase		EC011022
Materiāls		Tērauds
Tips		10, 20, 30
Virsmas struktūra		Līdzens gluds
Maks. darba spiediens	bar	10
Standarta pieslēgumu skaits		2
Siltuma atdeve pēc EN 442 atzītas laboratorijas		Jā
Maksimālā darbības temperatūra	°C	110
Standarta krāsa		Jā
Krāsa		Balts
RAL numurs		9016
Restes/Vāka plāksne		Jā
Restes/Vāka plāksne		Jā
Spīduma vērtība		Spīdīgs
Vītnes izmērs (collas)		1/2 inch
Pieslēguma vītne		Iekšējā vītne
Ar vienpunkta pieslēgumu		Jā
Ar ventilācijas pieslēgumu		Jā
Ar ventilācijas vārstu/gaisa atgaisotāju		Jā
Ar iztukšošanas iespēju		Jā

Resursi

ProductImage - Plan Ventil Hygiene

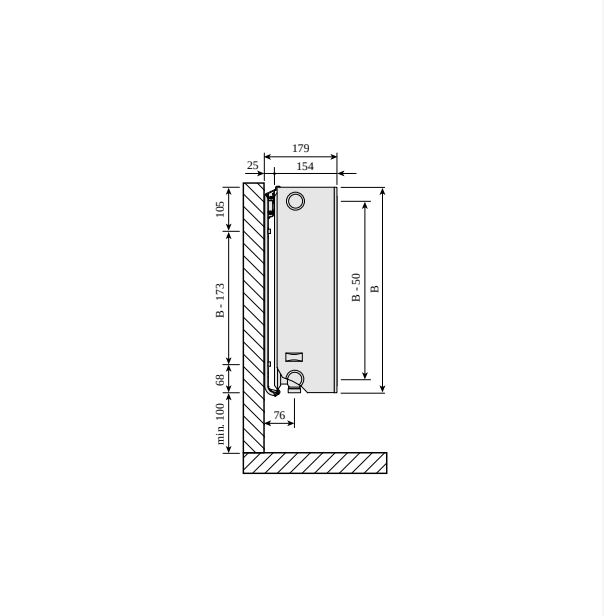

DimensionalDrawing - Plan Ventil Compact / Ramo Ventil Compact, tips 33, skats no sāniem

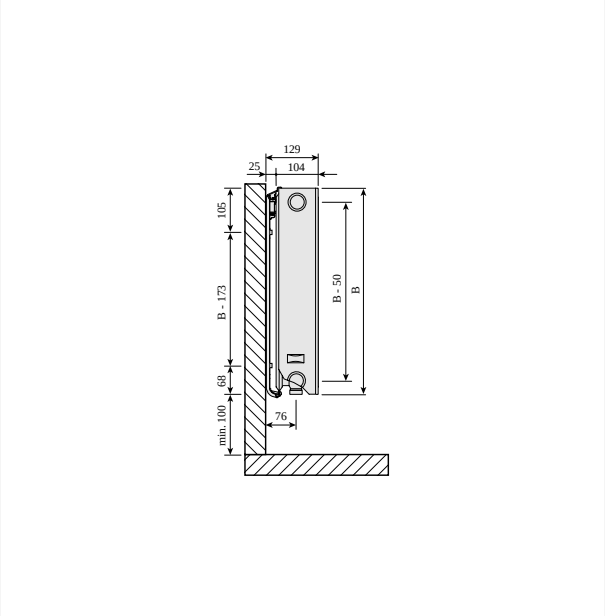

DimensionalDrawing - Ventil Compact Plan, tips 22, skats no sāniem

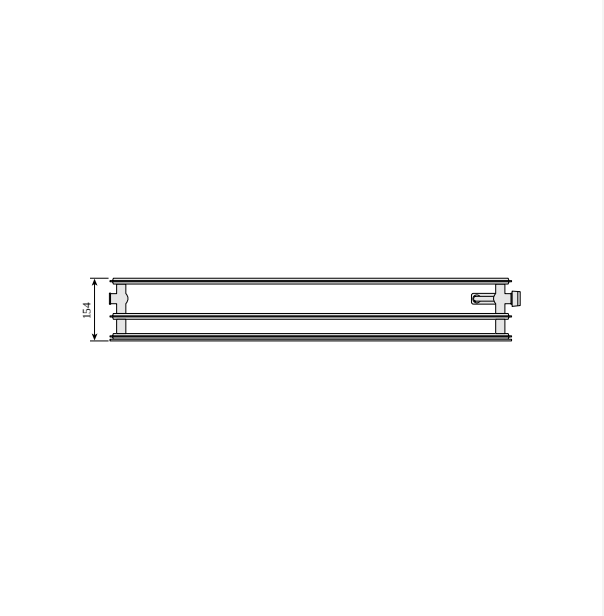

DimensionalDrawing - Plan Ventil Hygiene, tips 30, skats no augšas

Resursi

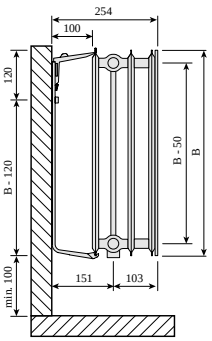

DimensionalDrawing - Plan Ventil Hygiene, tips 30, skats no sāniem

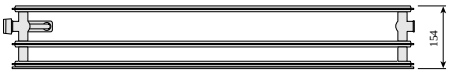

DimensionalDrawing - Plan Ventil Hygiene, tips 30, pa kreisi, skats no augšas

DimensionalDrawing - Plan Ventil Hygiene, tips 20, skats no augšas

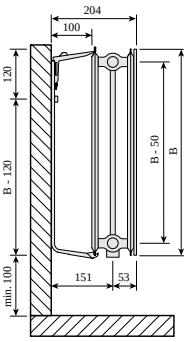

DimensionalDrawing - Plan Ventil Hygiene, tips 20, skats no sāniem

Resursi

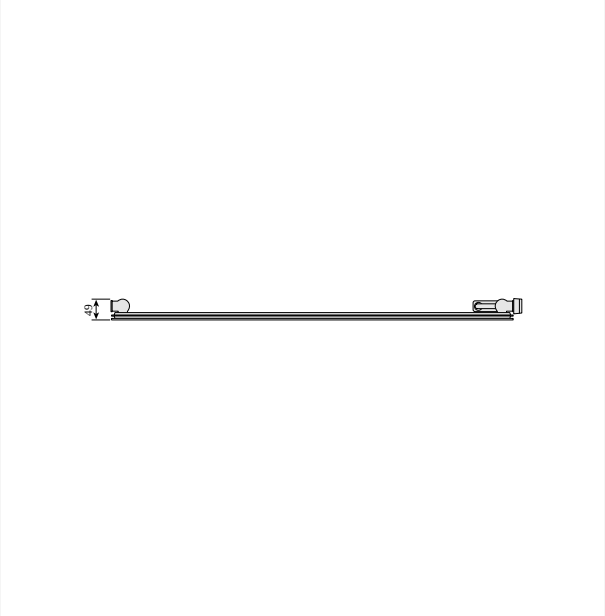

DimensionalDrawing - Plan Ventil Hygiene, tips 10, skats no augšas

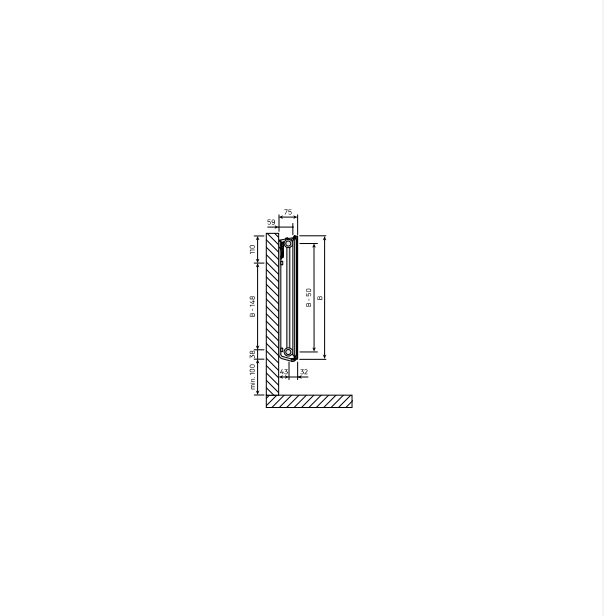

DimensionalDrawing - Plan Ventil Hygiene, tips 10, skats no sāniem, MCK

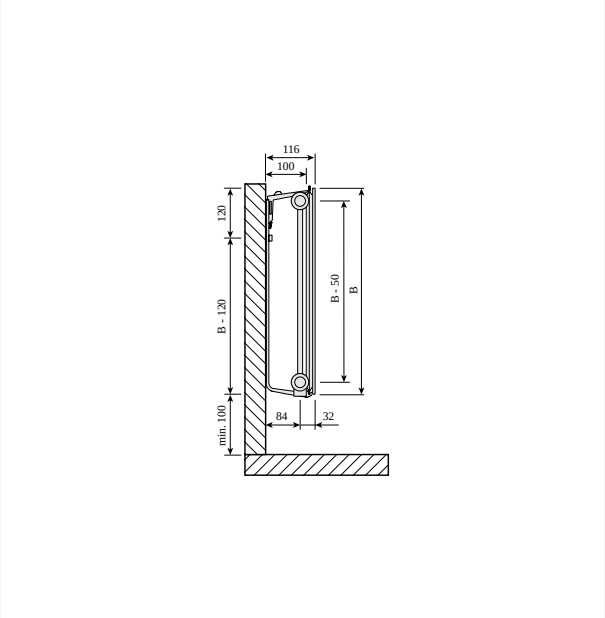

DimensionalDrawing - Plan Ventil Hygiene, tips 10, skats no sāniem

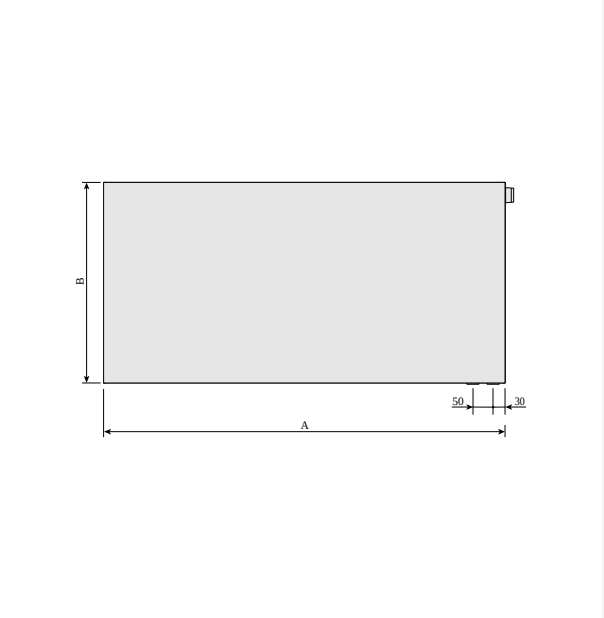

DimensionalDrawing - Plan Ventil Hygiene, pa labi, skats no priekšpuses

Resursi

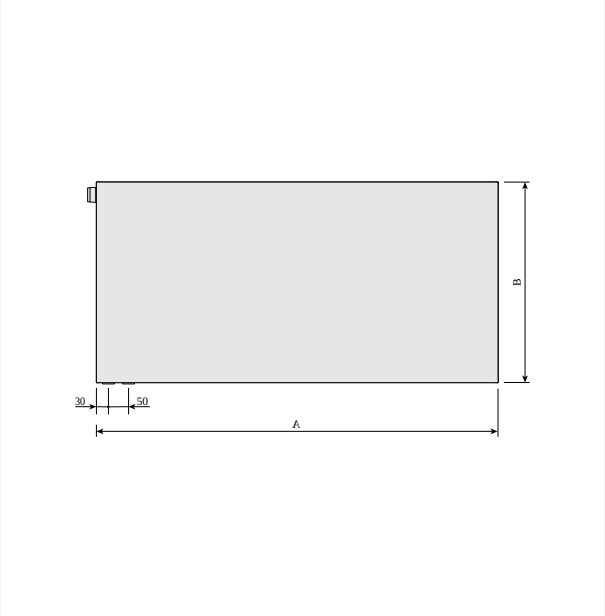

DimensionalDrawing - Plan Ventil Hygiene, pa kreisi, skats no priekšpuses

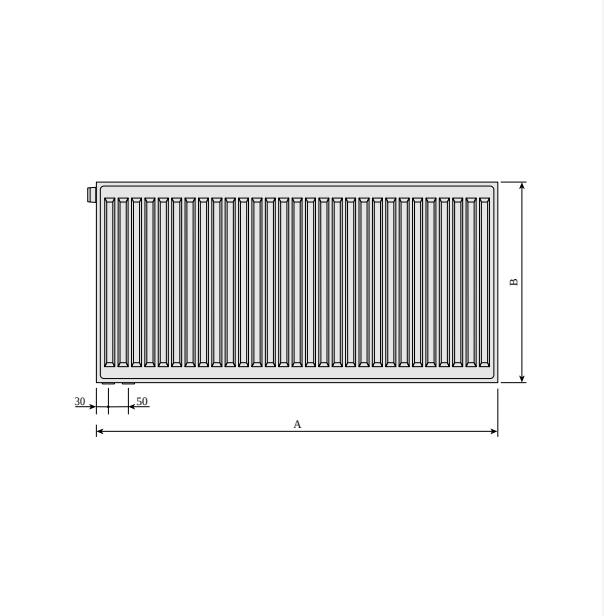

DimensionalDrawing - Plan Ventil Hygiene, skats no aizmugures

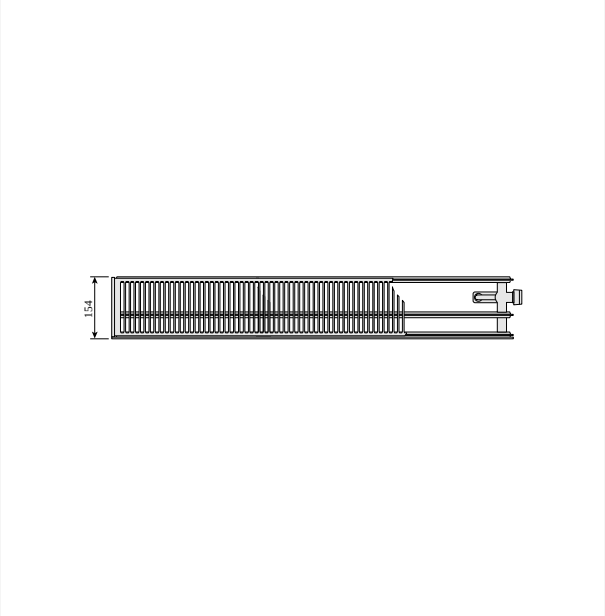

DimensionalDrawing - Plan Ventil Compact un Ramo Ventil Compact, tips 30, pa labi, skats no augšas

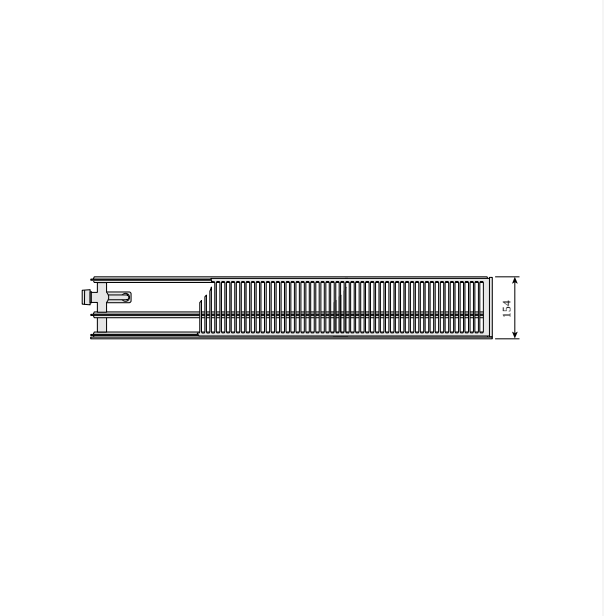

DimensionalDrawing - Plan Ventil Compact un Ramo Ventil Compact, tips 30, pa kreisi, skats no augšas

Resursi

DimensionalDrawing - Plan Ventil Compact un Ramo Ventil Compact, tips 20, pa labi, skats no augšas

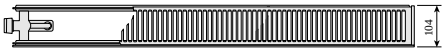

DimensionalDrawing - Plan Ventil Compact un Ramo Ventil Compact, tips 20, pa kreisi, skats no augšas

300

AUGSTUMS 300 mm	GARUMS	DZIĻUMS			Jauda (W) 45/35/20°C	Jauda (W) 55/45/20°C	Jauda (W) 60/45/20°C	TILPUMS (l)	N-ekponents	SVARS (kg)
Tips 10										
	400	49	F0A1003004001310	F0A1003004001300	37	64	70	0.7	1.31	4.5
	500	49	F0A1003005001310	F0A1003005001300	46	80	87	0.8	1.31	5.5
	600	49	F0A1003006001310	F0A1003006001300	55	96	104	1.0	1.31	6.2
	700	49	F0A1003007001310	F0A1003007001300	64	112	122	1.2	1.31	7.3
	800	49	F0A1003008001310	F0A1003008001300	74	128	139	1.4	1.31	7.9
	900	49	F0A1003009001310	F0A1003009001300	83	144	157	1.5	1.31	8.8
	1000	49	F0A1003010001310	F0A1003010001300	92	161	174	1.7	1.31	9.9
	1100	49	F0A1003011001310	F0A1003011001300	101	177	191	1.9	1.31	1.4
	1200	49	F0A1003012001310	F0A1003012001300	110	193	209	2.0	1.31	11.2
	1400	49	F0A1003014001310	F0A1003014001300	129	225	244	2.4	1.31	13.4
	1600	49	F0A1003016001310	F0A1003016001300	147	257	278	2.7	1.31	15.2
	1800	49	F0A1003018001310	F0A1003018001300	165	289	313	3.1	1.31	16.9
	2000	49	F0A1003020001310	F0A1003020001300	184	321	348	3.4	1.31	18.7
	2300	49	F0A1003023001310	F0A1003023001300	211	369	400	3.9	1.31	2.5
	2600	49	F0A1003026001310	F0A1003026001300	239	417	452	4.4	1.31	23.4
	3000	49	F0A1003030001310	F0A1003030001300	276	482	522	5.1	1.31	27.5
Tips 20										
	400	104	F0A2003004001310	F0A2003004001300	73	125	135	1.4	1.27	6.8
	500	104	F0A2003005001310	F0A2003005001300	91	156	169	1.7	1.27	7.8
	600	104	F0A2003006001310	F0A2003006001300	109	187	203	2.0	1.27	9.5
	700	104	F0A2003007001310	F0A2003007001300	127	219	237	2.4	1.27	1.4
	800	104	F0A2003008001310	F0A2003008001300	145	250	270	2.7	1.27	12.1
	900	104	F0A2003009001310	F0A2003009001300	164	281	304	3.1	1.27	13.0
	1000	104	F0A2003010001310	F0A2003010001300	182	312	338	3.4	1.27	14.8

300

AUGSTUMS 300 mm	GARUMS	DZIĻUMS			Jauda (W) 45/35/20°C	Jauda (W) 55/45/20°C	Jauda (W) 60/45/20°C	TILPUMS (l)	N-ekponents	SVARS (kg)
	1100	104	F0A2003011001310	F0A2003011001300	200	344	372	3.7	1.27	16.2
	1200	104	F0A2003012001310	F0A2003012001300	218	375	406	4.1	1.27	16.8
	1400	104	F0A2003014001310	F0A2003014001300	254	437	473	4.8	1.27	19.4
	1600	104	F0A2003016001310	F0A2003016001300	291	500	541	5.4	1.27	22.9
	1800	104	F0A2003018001310	F0A2003018001300	327	562	608	6.1	1.27	24.6
	2000	104	F0A2003020001310	F0A2003020001300	363	625	676	6.8	1.27	27.1
	2300	104	F0A2003023001310	F0A2003023001300	418	719	777	7.8	1.27	31.2
	2600	104	F0A2003026001310	F0A2003026001300	472	812	879	8.8	1.27	36.3
	3000	104	F0A2003030001310	F0A2003030001300	545	937	1014	10.2	1.27	4.6
Tips 30										
	400	154	F0A3003004001310	F0A3003004001300	99	172	187	2.0	1.29	8.3
	500	154	F0A3003005001310	F0A3003005001300	124	215	233	2.5	1.29	10.2
	600	154	F0A3003006001310	F0A3003006001300	149	259	280	3.1	1.29	12.1
	700	154	F0A3003007001310	F0A3003007001300	174	302	327	3.6	1.29	14.0
	800	154	F0A3003008001310	F0A3003008001300	199	345	373	4.1	1.29	15.9
	900	154	F0A3003009001310	F0A3003009001300	223	388	420	4.6	1.29	17.8
	1000	154	F0A3003010001310	F0A3003010001300	248	431	467	5.1	1.29	19.7
	1100	154	F0A3003011001310	F0A3003011001300	273	474	513	5.6	1.29	21.6
	1200	154	F0A3003012001310	F0A3003012001300	298	517	560	6.1	1.29	23.5
	1400	154	F0A3003014001310	F0A3003014001300	348	603	653	7.1	1.29	27.2
	1600	154	F0A3003016001310	F0A3003016001300	397	689	747	8.2	1.29	29.8
	1800	154	F0A3003018001310	F0A3003018001300	447	776	840	9.2	1.29	33.5
	2000	154	F0A3003020001310	F0A3003020001300	496	862	933	10.2	1.29	38.0
	2300	154	F0A3003023001310	F0A3003023001300	571	991	1073	11.7	1.29	42.5
	2600	154	F0A3003026001310	F0A3003026001300	645	1120	1213	13.3	1.29	48.4
	3000	154	F0A3003030001310	F0A3003030001300	745	1293	1400	15.3	1.29	57.5

500

AUGSTUMS 500 mm	GARUMS	DZIĻUMS			Jauda (W) 45/35/20°C	Jauda (W) 55/45/20°C	Jauda (W) 60/45/20°C	TILPUMS (l)	N-ekponents	SVARS (kg)
Tips 10										
	400	49	F0A1005004001310	F0A1005004001300	61	105	114	1.1	1.28	6.8
	500	49	F0A1005005001310	F0A1005005001300	76	131	142	1.4	1.28	8.2
	600	49	F0A1005006001310	F0A1005006001300	91	158	171	1.6	1.28	9.6
	700	49	F0A1005007001310	F0A1005007001300	107	184	199	1.9	1.28	2.0
	800	49	F0A1005008001310	F0A1005008001300	122	210	227	2.2	1.28	12.3
	900	49	F0A1005009001310	F0A1005009001300	137	236	256	2.4	1.28	13.7
	1000	49	F0A1005010001310	F0A1005010001300	152	263	284	2.7	1.28	15.7
	1100	49	F0A1005011001310	F0A1005011001300	167	289	313	3.0	1.28	16.5
	1200	49	F0A1005012001310	F0A1005012001300	183	315	341	3.2	1.28	17.8
	1400	49	F0A1005014001310	F0A1005014001300	213	368	398	3.8	1.28	2.7
	1600	49	F0A1005016001310	F0A1005016001300	244	420	455	4.3	1.28	23.4
	1800	49	F0A1005018001310	F0A1005018001300	274	473	512	4.9	1.28	27.2
	2000	49	F0A1005020001310	F0A1005020001300	304	526	569	5.4	1.28	30.1
	2300	49	F0A1005023001310	F0A1005023001300	350	604	654	6.2	1.28	33.4
	2600	49	F0A1005026001310	F0A1005026001300	396	683	739	7.0	1.28	38.7
	3000	49	F0A1005030001310	F0A1005030001300	457	788	853	8.1	1.28	42.7
Tips 20										
	400	104	F0A2005004001310	F0A2005004001300	106	183	198	2.2	1.28	10.3
	500	104	F0A2005005001310	F0A2005005001300	132	229	248	2.8	1.28	12.5
	600	104	F0A2005006001310	F0A2005006001300	159	274	297	3.3	1.28	14.2
	700	104	F0A2005007001310	F0A2005007001300	185	320	347	3.9	1.28	16.9
	800	104	F0A2005008001310	F0A2005008001300	212	366	396	4.4	1.28	18.4
	900	104	F0A2005009001310	F0A2005009001300	238	412	446	5.0	1.28	2.4
	1000	104	F0A2005010001310	F0A2005010001300	265	457	495	5.5	1.28	22.6
	1100	104	F0A2005011001310	F0A2005011001300	291	503	545	6.0	1.28	24.8

500

AUGSTUMS 500 mm	GARUMS	DZIĻUMS			Jauda (W) 45/35/20°C	Jauda (W) 55/45/20°C	Jauda (W) 60/45/20°C	TILPUMS (l)	N-ekponents	SVARS (kg)
	1200	104	F0A2005012001310	F0A2005012001300	318	549	594	6.6	1.28	26.9
	1400	104	F0A2005014001310	F0A2005014001300	371	640	693	7.7	1.28	32.0
	1600	104	F0A2005016001310	F0A2005016001300	424	732	792	8.8	1.28	35.3
	1800	104	F0A2005018001310	F0A2005018001300	477	823	891	9.9	1.28	39.6
	2000	104	F0A2005020001310	F0A2005020001300	530	915	990	11.0	1.28	45.5
	2300	104	F0A2005023001310	F0A2005023001300	609	1052	1139	12.7	1.28	52.1
	2600	104	F0A2005026001310	F0A2005026001300	689	1189	1287	14.3	1.28	58.8
	3000	104	F0A2005030001310	F0A2005030001300	794	1372	1485	16.5	1.28	67.5
Tips 30										
	400	154	F0A3005004001310	F0A3005004001300	144	251	272	3.3	1.30	12.6
	500	154	F0A3005005001310	F0A3005005001300	180	313	340	4.1	1.30	15.7
	600	154	F0A3005006001310	F0A3005006001300	216	376	408	4.9	1.30	18.9
	700	154	F0A3005007001310	F0A3005007001300	252	439	475	5.7	1.30	22.0
	800	154	F0A3005008001310	F0A3005008001300	288	501	543	6.6	1.30	25.1
	900	154	F0A3005009001310	F0A3005009001300	324	564	611	7.4	1.30	28.3
	1000	154	F0A3005010001310	F0A3005010001300	360	627	679	8.2	1.30	31.4
	1100	154	F0A3005011001310	F0A3005011001300	396	689	747	9.0	1.30	33.3
	1200	154	F0A3005012001310	F0A3005012001300	431	752	815	9.8	1.30	36.3
	1400	154	F0A3005014001310	F0A3005014001300	503	877	951	11.5	1.30	42.3
	1600	154	F0A3005016001310	F0A3005016001300	575	1003	1087	13.1	1.30	48.3
	1800	154	F0A3005018001310	F0A3005018001300	647	1128	1223	14.8	1.30	54.4
	2000	154	F0A3005020001310	F0A3005020001300	719	1253	1358	16.4	1.30	62.8
	2300	154	F0A3005023001310	F0A3005023001300	827	1442	1562	18.9	1.30	72.2
	2600	154	F0A3005026001310	F0A3005026001300	935	1630	1766	21.3	1.30	81.6
	3000	154	F0A3005030001310	F0A3005030001300	1079	1880	2038	24.6	1.30	94.2

600

AUGSTUMS 600 mm	GARUMS	DZIĻUMS			Jauda (W) 45/35/20°C	Jauda (W) 55/45/20°C	Jauda (W) 60/45/20°C	TILPUMS (l)	N-ekponents	SVARS (kg)
Tips 10										
	400	49	F0A1006004001310	F0A1006004001300	72	124	134	1.3	1.26	8.2
	500	49	F0A1006005001310	F0A1006005001300	90	155	168	1.6	1.26	10.1
	600	49	F0A1006006001310	F0A1006006001300	109	186	201	1.9	1.26	11.4
	700	49	F0A1006007001310	F0A1006007001300	127	217	235	2.2	1.26	13.1
	800	49	F0A1006008001310	F0A1006008001300	145	248	268	2.6	1.26	14.8
	900	49	F0A1006009001310	F0A1006009001300	163	279	302	2.9	1.26	16.5
	1000	49	F0A1006010001310	F0A1006010001300	181	310	335	3.2	1.26	18.2
	1100	49	F0A1006011001310	F0A1006011001300	199	341	369	3.5	1.26	19.9
	1200	49	F0A1006012001310	F0A1006012001300	217	372	403	3.8	1.26	21.6
	1400	49	F0A1006014001310	F0A1006014001300	253	434	470	4.5	1.26	23.8
	1600	49	F0A1006016001310	F0A1006016001300	289	496	537	5.1	1.26	28.3
	1800	49	F0A1006018001310	F0A1006018001300	326	558	604	5.8	1.26	31.7
	2000	49	F0A1006020001310	F0A1006020001300	362	621	671	6.4	1.26	35.1
	2300	49	F0A1006023001310	F0A1006023001300	416	714	772	7.4	1.26	4.2
	2600	49	F0A1006026001310	F0A1006026001300	470	807	872	8.3	1.26	45.3
	3000	49	F0A1006030001310	F0A1006030001300	543	931	1006	9.6	1.26	52.4
Tips 20										
	400	104	F0A2006004001310	F0A2006004001300	122	210	228	2.6	1.29	11.9
	500	104	F0A2006005001310	F0A2006005001300	152	263	285	3.3	1.29	14.8
	600	104	F0A2006006001310	F0A2006006001300	182	316	342	4.0	1.29	16.8
	700	104	F0A2006007001310	F0A2006007001300	213	368	399	4.6	1.29	19.8
	800	104	F0A2006008001310	F0A2006008001300	243	421	456	5.3	1.29	22.5
	900	104	F0A2006009001310	F0A2006009001300	274	474	513	5.9	1.29	25.1
	1000	104	F0A2006010001310	F0A2006010001300	304	526	570	6.6	1.29	27.5
	1100	104	F0A2006011001310	F0A2006011001300	334	579	627	7.3	1.29	3.4

600

AUGSTUMS 600 mm	GARUMS	DZIĻUMS			Jauda (W) 45/35/20°C	Jauda (W) 55/45/20°C	Jauda (W) 60/45/20°C	TILPUMS (l)	N-ekponents	SVARS (kg)
	1200	104	F0A2006012001310	F0A2006012001300	365	631	684	7.9	1.29	32.8
	1400	104	F0A2006014001310	F0A2006014001300	426	737	798	9.2	1.29	38.3
	1600	104	F0A2006016001310	F0A2006016001300	486	842	911	10.6	1.29	43.6
	1800	104	F0A2006018001310	F0A2006018001300	547	947	1025	11.9	1.29	48.9
	2000	104	F0A2006020001310	F0A2006020001300	608	1052	1139	13.2	1.29	54.1
	2300	104	F0A2006023001310	F0A2006023001300	699	1210	1310	15.2	1.29	64.5
	2600	104	F0A2006026001310	F0A2006026001300	790	1368	1481	17.2	1.29	72.8
	3000	104	F0A2006030001310	F0A2006030001300	912	1579	1709	19.8	1.29	83.7
Tips 30										
	400	154	F0A3006004001310	F0A3006004001300	164	287	311	3.9	1.31	15.2
	500	154	F0A3006005001310	F0A3006005001300	206	359	389	4.9	1.31	18.3
	600	154	F0A3006006001310	F0A3006006001300	247	431	467	5.9	1.31	22.8
	700	154	F0A3006007001310	F0A3006007001300	288	503	545	6.9	1.31	25.6
	800	154	F0A3006008001310	F0A3006008001300	329	574	623	7.8	1.31	29.2
	900	154	F0A3006009001310	F0A3006009001300	370	646	701	8.8	1.31	32.9
	1000	154	F0A3006010001310	F0A3006010001300	411	718	778	9.8	1.31	36.5
	1100	154	F0A3006011001310	F0A3006011001300	452	790	856	10.8	1.31	4.2
	1200	154	F0A3006012001310	F0A3006012001300	493	862	934	11.8	1.31	43.8
	1400	154	F0A3006014001310	F0A3006014001300	575	1005	1090	13.7	1.31	51.9
	1600	154	F0A3006016001310	F0A3006016001300	658	1149	1245	15.7	1.31	60.7
	1800	154	F0A3006018001310	F0A3006018001300	740	1292	1401	17.6	1.31	68.3
	2000	154	F0A3006020001310	F0A3006020001300	822	1436	1557	19.6	1.31	73.0
	2300	154	F0A3006023001310	F0A3006023001300	945	1651	1790	22.5	1.31	87.2
	2600	154	F0A3006026001310	F0A3006026001300	1069	1867	2024	25.5	1.31	98.6
	3000	154	F0A3006030001310	F0A3006030001300	1233	2154	2335	29.4	1.31	113.8

900

AUGSTUMS 900 mm	GARUMS	DZIĻUMS			Jauda (W) 45/35/20°C	Jauda (W) 55/45/20°C	Jauda (W) 60/45/20°C	TILPUMS (l)	N-ekponents	SVARS (kg)
Tips 10										
	400	49	F0A1009004001310	F0A1009004001300	99	171	185	1.8	1.28	11.3
	500	49	F0A1009005001310	F0A1009005001300	124	214	231	2.3	1.28	13.9
	600	49	F0A1009006001310	F0A1009006001300	149	256	277	2.7	1.28	16.3
	700	49	F0A1009007001310	F0A1009007001300	173	299	323	3.1	1.28	18.9
	800	49	F0A1009008001310	F0A1009008001300	198	342	370	3.6	1.28	21.4
	900	49	F0A1009009001310	F0A1009009001300	223	384	416	4.0	1.28	23.9
	1000	49	F0A1009010001310	F0A1009010001300	248	427	462	4.5	1.28	26.4
	1100	49	F0A1009011001310	F0A1009011001300	272	470	508	5.0	1.28	29.0
	1200	49	F0A1009012001310	F0A1009012001300	297	513	555	5.4	1.28	31.5
	1400	49	F0A1009014001310	F0A1009014001300	347	598	647	6.3	1.28	36.5
	1600	49	F0A1009016001310	F0A1009016001300	396	683	739	7.2	1.28	43.2
	1800	49	F0A1009018001310	F0A1009018001300	446	769	832	8.1	1.28	46.6
	2000	49	F0A1009020001310	F0A1009020001300	495	854	924	9.0	1.28	53.8
Tips 20										
	400	104	F0A2009004001310	F0A2009004001300	171	295	319	3.6	1.27	16.6
	500	104	F0A2009005001310	F0A2009005001300	214	368	398	4.5	1.27	2.5
	600	104	F0A2009006001310	F0A2009006001300	257	442	478	5.4	1.27	24.2
	700	104	F0A2009007001310	F0A2009007001300	299	516	558	6.3	1.27	29.1
	800	104	F0A2009008001310	F0A2009008001300	342	589	637	7.2	1.27	31.7
	900	104	F0A2009009001310	F0A2009009001300	385	663	717	8.1	1.27	35.5
	1000	104	F0A2009010001310	F0A2009010001300	428	736	797	9.0	1.27	39.4
	1100	104	F0A2009011001310	F0A2009011001300	471	810	876	9.9	1.27	44.8
	1200	104	F0A2009012001310	F0A2009012001300	513	884	956	10.8	1.27	46.9
	1400	104	F0A2009014001310	F0A2009014001300	599	1031	1115	12.6	1.27	54.4
	1600	104	F0A2009016001310	F0A2009016001300	685	1178	1275	14.4	1.27	64.4

900

AUGSTUMS 900 mm	GARUMS	DZIĻUMS			Jauda (W) 45/35/20°C	Jauda (W) 55/45/20°C	Jauda (W) 60/45/20°C	TILPUMS (l)	N-ekponents	SVARS (kg)
	1800	104	F0A2009018001310	F0A2009018001300	770	1326	1434	16.2	1.27	72.3
	2000	104	F0A2009020001310	F0A2009020001300	856	1473	1593	18.0	1.27	77.8
Tips 30										
	400	154	F0A3009004001310	F0A3009004001300	225	394	427	5.3	1.32	21.8
	500	154	F0A3009005001310	F0A3009005001300	281	492	534	6.7	1.32	27.3
	600	154	F0A3009006001310	F0A3009006001300	337	591	640	8.0	1.32	31.6
	700	154	F0A3009007001310	F0A3009007001300	393	689	747	9.3	1.32	36.9
	800	154	F0A3009008001310	F0A3009008001300	449	787	854	10.6	1.32	42.3
	900	154	F0A3009009001310	F0A3009009001300	505	886	961	12.0	1.32	49.5
	1000	154	F0A3009010001310	F0A3009010001300	561	984	1067	13.3	1.32	52.9
	1100	154	F0A3009011001310	F0A3009011001300	618	1083	1174	14.6	1.32	60.6
	1200	154	F0A3009012001310	F0A3009012001300	674	1181	1281	16.0	1.32	66.1
	1400	154	F0A3009014001310	F0A3009014001300	786	1378	1494	18.6	1.32	74.3
	1600	154	F0A3009016001310	F0A3009016001300	898	1575	1708	21.3	1.32	88.3
	1800	154	F0A3009018001310	F0A3009018001300	1011	1772	1921	23.9	1.32	99.4
	2000	154	F0A3009020001310	F0A3009020001300	1123	1968	2135	26.6	1.32	110.5