**Datu lapa**
2026-10-06

# Plan Ventil Hygiene (FHV)

Higiēnisks paneļu radiators ar plakanu priekšpusi un apakšējo pieslēgumu.

- Higiēniska konstrukcija
- Izturīga konstrukcija
- Augsts darba spiediens
- Plaša izmēru izvēle
- Vienkārša uzstādīšana

Plan Ventil Hygiene paneļu radiators ar pilnīgi gludu priekšējo plātni, bez sānu un augšējām restēm, īpaši piemērots telpām ar paaugstinātām higiēnas prasībām; iespējams pieslēgums no apakšas vai sāniem; standarta tonis RAL 9016.

**Pielietojuma joma**
Plan Ventil Hygiene paredzēts vidiem ar augstām higiēnas prasībām, piemēram, slimnīcām, laboratorijām un tīrtelpām. Izgatavots no auksti velmēta tērauda, ar darba spiedienu līdz 10 bar. Pieejams augstumos no 300 līdz 3000 mm. Bez konvekcijas ribām, viegli tīrāms, bez augšējās restes un sānu paneļiem.

**Dimensiju noteikšana**
Lai nodrošinātu pareizu produktu izvēli, lūdzu, izmantojiet mūsu kalkulatoru rīkus un produktu bukletus. Ja nepieciešama palīdzība, sazinieties ar mūsu pārdošanas komandu.

**Lietošana**
Plan Ventil Hygiene jāuzstāda ar komplektā esošajiem montāžas kronšteiniem, kas atbilst ierīces izmēram, un visiem savienojumiem jābūt hermētiski noslēgtiem, ievērojot ekspluatācijas ierobežojumus; regulāri tīri gludo virsmu un malas ar neabrazīvu drānu higiēnas uzturēšanai un izvairies no spēcīgiem tīrīšanas līdzekļiem; pārbaudi, vai nav aizsprostojumu un nodrošini brīvu piekļuvi apkārt radiatoram efektīvai siltuma apmaiņai.

**AMA teksts**
Plan Ventil Hygiene radiators paredzēts higiēniski prasīgām telpām, tostarp medicīnas iestādēm un tīrajām telpām. Izgatavots no auksti velmēta tērauda ar gludu virsmu bez konvektoriem un bez sānu/augšējiem paneļiem, kas atvieglo tīrīšanu. Pieejams 300–3000 mm augstumā. Darba spiediens līdz 10 bar.
Epoksīda-poliestera pārklājums nodrošina izturību pret tīrīšanas līdzekļiem. Komplektā stiprinājumi. Standarta pārklājums RAL 9016.

# Specifikācijas

| ĪPAŠĪBAS | VIENĪBA | VĒRTĪBAS |
|---|---|---|
| ETIM klase | | EC011022 |
| Materiāls | | Tērauds |
| Tips | | 10, 20, 30 |
| Virsmas struktūra | | Līdzens gluds |
| Maks. darba spiediens | bar | 10 |
| Standarta pieslēgumu skaits | | 2 |
| Siltuma atdeve pēc EN 442 atzītas laboratorijas | | Jā |
| Maksimālā darbības temperatūra | °C | 110 |
| Standarta krāsa | | Jā |
| Krāsa | | Balts |
| RAL numurs | | 9016 |
| Restes/Vāka plāksne | | Jā |
| Restes/Vāka plāksne | | Jā |
| Spīduma vērtība | | Spīdīgs |
| Vītnes izmērs (collas) | | 1/2 inch |
| Pieslēguma vītne | | Iekšējā vītne |
| Ar vienpunkta pieslēgumu | | Jā |
| Ar ventilācijas pieslēgumu | | Jā |
| Ar ventilācijas vārstu/gaisa atgaisotāju | | Jā |
| Ar iztukšošanas iespēju | | Jā |

# Resursi

ProductImage - Plan Ventil Hygiene

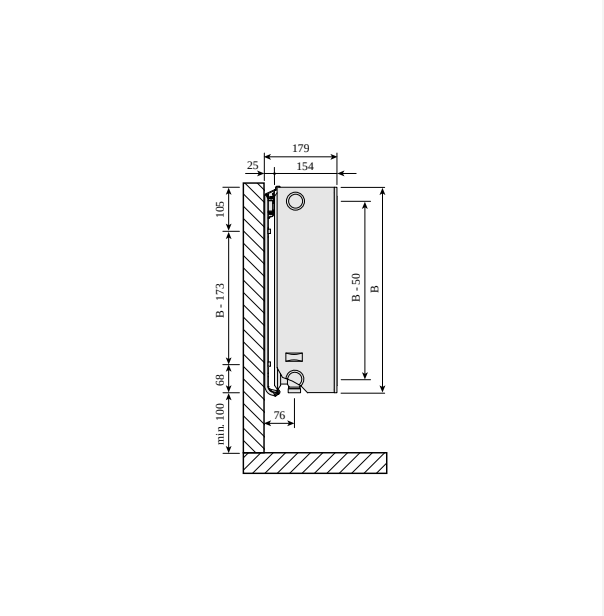


DimensionalDrawing - Plan Ventil Compact / Ramo Ventil Compact, tips 33, skats no sāniem

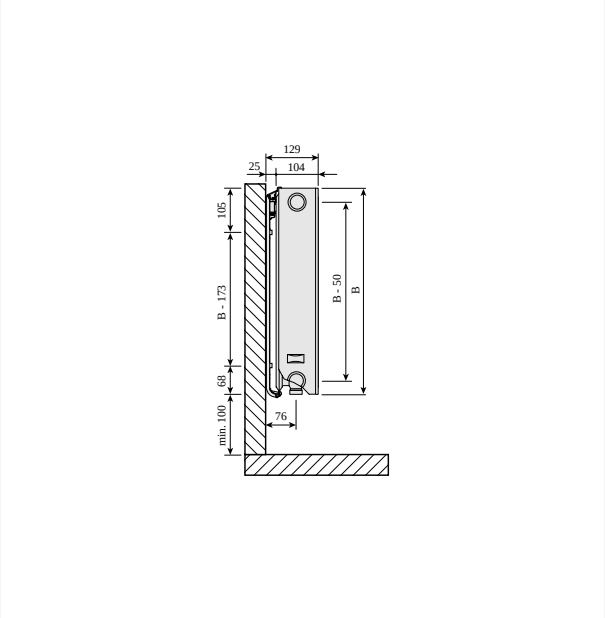


DimensionalDrawing - Ventil Compact Plan, tips 22, skats no sāniem

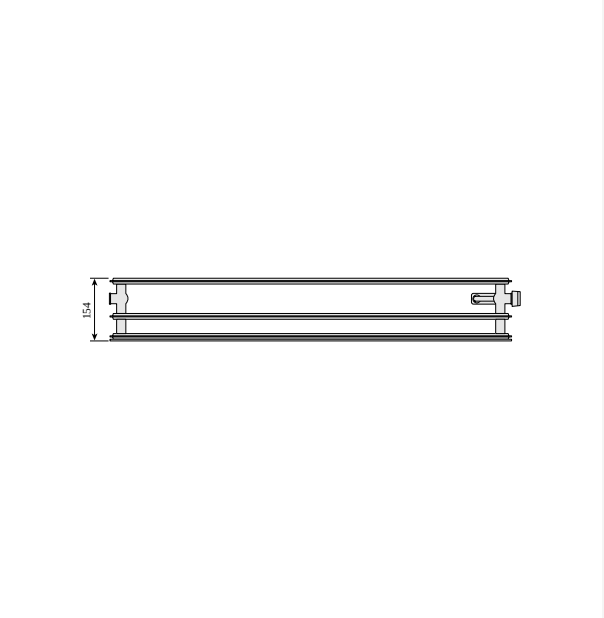


DimensionalDrawing - Plan Ventil Hygiene, tips 30, skats no augšas

# Resursi

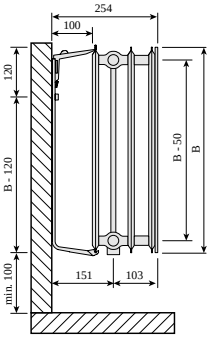


DimensionalDrawing - Plan Ventil Hygiene, tips 30, skats no sāniem

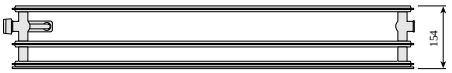


DimensionalDrawing - Plan Ventil Hygiene, tips 30, pa kreisi, skats no augšas

DimensionalDrawing - Plan Ventil Hygiene, tips 20, skats no augšas

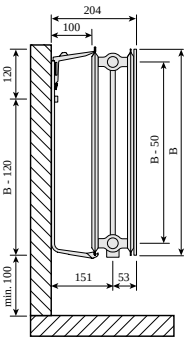


DimensionalDrawing - Plan Ventil Hygiene, tips 20, skats no sāniem

# Resursi

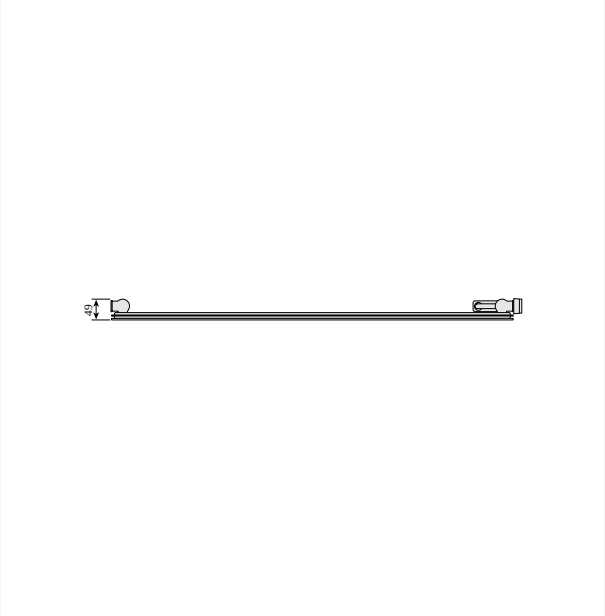


DimensionalDrawing - Plan Ventil Hygiene, tips 10, skats no augšas

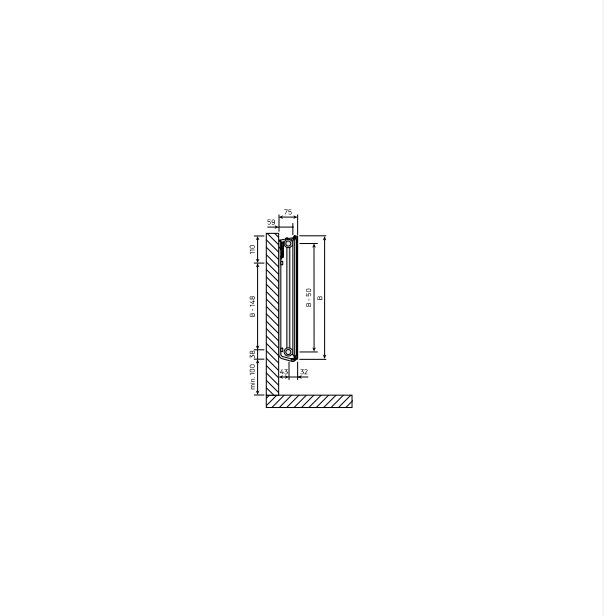


DimensionalDrawing - Plan Ventil Hygiene, tips 10, skats no sāniem, MCK

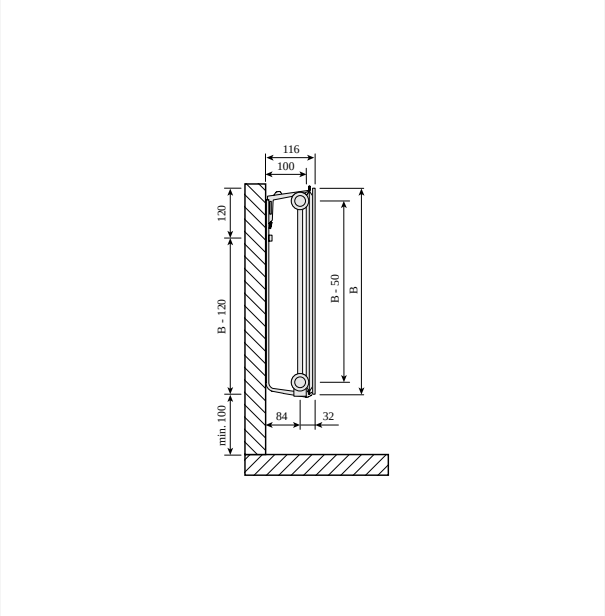


DimensionalDrawing - Plan Ventil Hygiene, tips 10, skats no sāniem

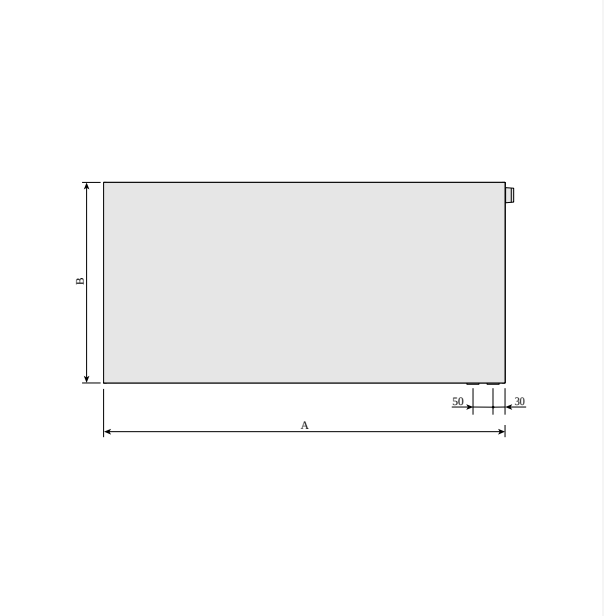


DimensionalDrawing - Plan Ventil Hygiene, pa labi, skats no priekšpuses

# Resursi

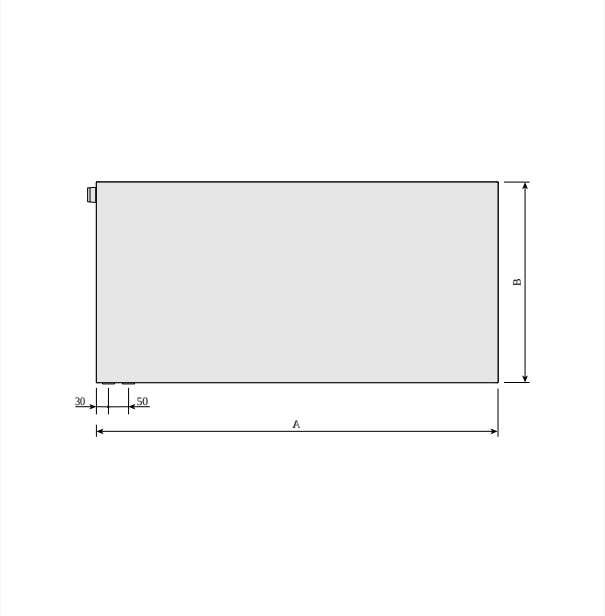


DimensionalDrawing - Plan Ventil Hygiene, pa kreisi, skats no priekšpuses

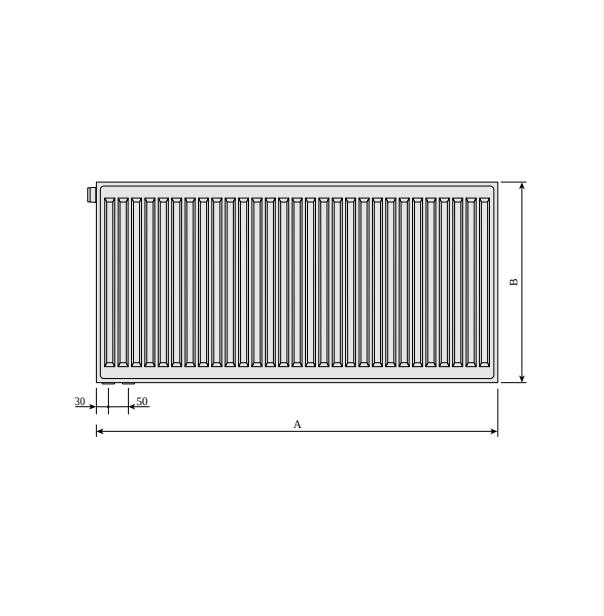


DimensionalDrawing - Plan Ventil Hygiene, skats no aizmugures

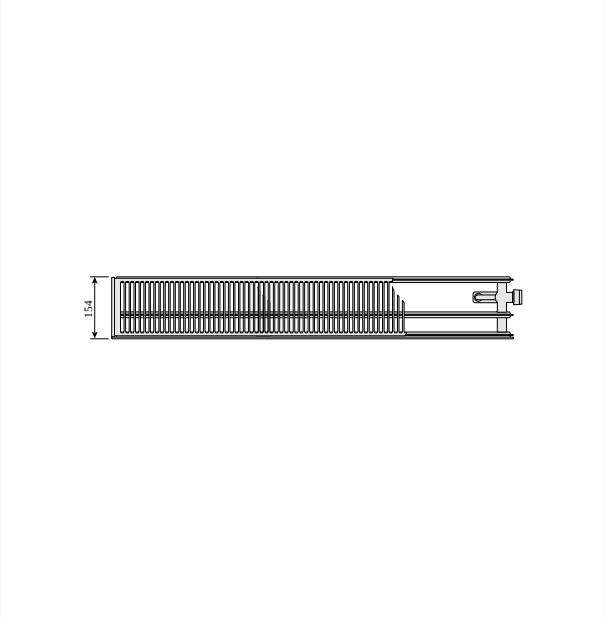


DimensionalDrawing - Plan Ventil Compact un Ramo Ventil Compact, tips 30, pa labi, skats no augšas

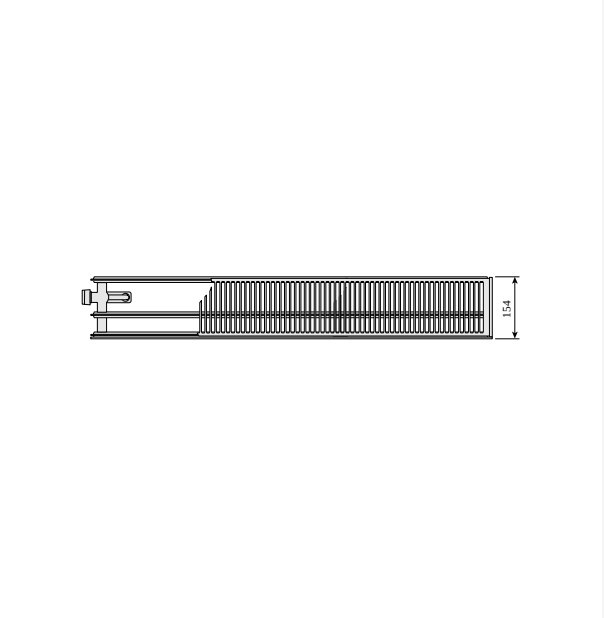


DimensionalDrawing - Plan Ventil Compact un Ramo Ventil Compact, tips 30, pa kreisi, skats no augšas

# Resursi

DimensionalDrawing - Plan Ventil Compact un Ramo Ventil Compact, tips 20, pa labi, skats no augšas

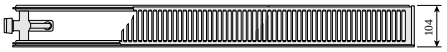


DimensionalDrawing - Plan Ventil Compact un Ramo Ventil Compact, tips 20, pa kreisi, skats no augšas

# 300

| AUGSTUMS 300 mm | GARUMS | DZIĻUMS | | | Jauda (W) 45/35/20°C | Jauda (W) 55/45/20°C | Jauda (W) 60/45/20°C | TILPUMS (l) | N-ekponents | SVARS (kg) |
|---|---|---|---|---|---|---|---|---|---|---|
| **Tips 10** | | | | | | | | | | |
| | 400 | 49 | F0A1003004001310 | F0A1003004001300 | 37 | 64 | 70 | 0.7 | 1.31 | 4.5 |
| | 500 | 49 | F0A1003005001310 | F0A1003005001300 | 46 | 80 | 87 | 0.8 | 1.31 | 5.5 |
| | 600 | 49 | F0A1003006001310 | F0A1003006001300 | 55 | 96 | 104 | 1.0 | 1.31 | 6.2 |
| | 700 | 49 | F0A1003007001310 | F0A1003007001300 | 64 | 112 | 122 | 1.2 | 1.31 | 7.3 |
| | 800 | 49 | F0A1003008001310 | F0A1003008001300 | 74 | 128 | 139 | 1.4 | 1.31 | 7.9 |
| | 900 | 49 | F0A1003009001310 | F0A1003009001300 | 83 | 144 | 157 | 1.5 | 1.31 | 8.8 |
| | 1000 | 49 | F0A1003010001310 | F0A1003010001300 | 92 | 161 | 174 | 1.7 | 1.31 | 9.9 |
| | 1100 | 49 | F0A1003011001310 | F0A1003011001300 | 101 | 177 | 191 | 1.9 | 1.31 | 1.4 |
| | 1200 | 49 | F0A1003012001310 | F0A1003012001300 | 110 | 193 | 209 | 2.0 | 1.31 | 11.2 |
| | 1400 | 49 | F0A1003014001310 | F0A1003014001300 | 129 | 225 | 244 | 2.4 | 1.31 | 13.4 |
| | 1600 | 49 | F0A1003016001310 | F0A1003016001300 | 147 | 257 | 278 | 2.7 | 1.31 | 15.2 |
| | 1800 | 49 | F0A1003018001310 | F0A1003018001300 | 165 | 289 | 313 | 3.1 | 1.31 | 16.9 |
| | 2000 | 49 | F0A1003020001310 | F0A1003020001300 | 184 | 321 | 348 | 3.4 | 1.31 | 18.7 |
| | 2300 | 49 | F0A1003023001310 | F0A1003023001300 | 211 | 369 | 400 | 3.9 | 1.31 | 2.5 |
| | 2600 | 49 | F0A1003026001310 | F0A1003026001300 | 239 | 417 | 452 | 4.4 | 1.31 | 23.4 |
| | 3000 | 49 | F0A1003030001310 | F0A1003030001300 | 276 | 482 | 522 | 5.1 | 1.31 | 27.5 |
| **Tips 20** | | | | | | | | | | |
| | 400 | 104 | F0A2003004001310 | F0A2003004001300 | 73 | 125 | 135 | 1.4 | 1.27 | 6.8 |
| | 500 | 104 | F0A2003005001310 | F0A2003005001300 | 91 | 156 | 169 | 1.7 | 1.27 | 7.8 |
| | 600 | 104 | F0A2003006001310 | F0A2003006001300 | 109 | 187 | 203 | 2.0 | 1.27 | 9.5 |
| | 700 | 104 | F0A2003007001310 | F0A2003007001300 | 127 | 219 | 237 | 2.4 | 1.27 | 1.4 |
| | 800 | 104 | F0A2003008001310 | F0A2003008001300 | 145 | 250 | 270 | 2.7 | 1.27 | 12.1 |
| | 900 | 104 | F0A2003009001310 | F0A2003009001300 | 164 | 281 | 304 | 3.1 | 1.27 | 13.0 |
| | 1000 | 104 | F0A2003010001310 | F0A2003010001300 | 182 | 312 | 338 | 3.4 | 1.27 | 14.8 |

# 300

| AUGSTUMS 300 mm | GARUMS | DZIĻUMS | | | Jauda (W) 45/35/20°C | Jauda (W) 55/45/20°C | Jauda (W) 60/45/20°C | TILPUMS (l) | N-ekponents | SVARS (kg) |
|---|---|---|---|---|---|---|---|---|---|---|
| | 1100 | 104 | F0A2003011001310 | F0A2003011001300 | 200 | 344 | 372 | 3.7 | 1.27 | 16.2 |
| | 1200 | 104 | F0A2003012001310 | F0A2003012001300 | 218 | 375 | 406 | 4.1 | 1.27 | 16.8 |
| | 1400 | 104 | F0A2003014001310 | F0A2003014001300 | 254 | 437 | 473 | 4.8 | 1.27 | 19.4 |
| | 1600 | 104 | F0A2003016001310 | F0A2003016001300 | 291 | 500 | 541 | 5.4 | 1.27 | 22.9 |
| | 1800 | 104 | F0A2003018001310 | F0A2003018001300 | 327 | 562 | 608 | 6.1 | 1.27 | 24.6 |
| | 2000 | 104 | F0A2003020001310 | F0A2003020001300 | 363 | 625 | 676 | 6.8 | 1.27 | 27.1 |
| | 2300 | 104 | F0A2003023001310 | F0A2003023001300 | 418 | 719 | 777 | 7.8 | 1.27 | 31.2 |
| | 2600 | 104 | F0A2003026001310 | F0A2003026001300 | 472 | 812 | 879 | 8.8 | 1.27 | 36.3 |
| | 3000 | 104 | F0A2003030001310 | F0A2003030001300 | 545 | 937 | 1014 | 10.2 | 1.27 | 4.6 |
| **Tips 30** | | | | | | | | | | |
| | 400 | 154 | F0A3003004001310 | F0A3003004001300 | 99 | 172 | 187 | 2.0 | 1.29 | 8.3 |
| | 500 | 154 | F0A3003005001310 | F0A3003005001300 | 124 | 215 | 233 | 2.5 | 1.29 | 10.2 |
| | 600 | 154 | F0A3003006001310 | F0A3003006001300 | 149 | 259 | 280 | 3.1 | 1.29 | 12.1 |
| | 700 | 154 | F0A3003007001310 | F0A3003007001300 | 174 | 302 | 327 | 3.6 | 1.29 | 14.0 |
| | 800 | 154 | F0A3003008001310 | F0A3003008001300 | 199 | 345 | 373 | 4.1 | 1.29 | 15.9 |
| | 900 | 154 | F0A3003009001310 | F0A3003009001300 | 223 | 388 | 420 | 4.6 | 1.29 | 17.8 |
| | 1000 | 154 | F0A3003010001310 | F0A3003010001300 | 248 | 431 | 467 | 5.1 | 1.29 | 19.7 |
| | 1100 | 154 | F0A3003011001310 | F0A3003011001300 | 273 | 474 | 513 | 5.6 | 1.29 | 21.6 |
| | 1200 | 154 | F0A3003012001310 | F0A3003012001300 | 298 | 517 | 560 | 6.1 | 1.29 | 23.5 |
| | 1400 | 154 | F0A3003014001310 | F0A3003014001300 | 348 | 603 | 653 | 7.1 | 1.29 | 27.2 |
| | 1600 | 154 | F0A3003016001310 | F0A3003016001300 | 397 | 689 | 747 | 8.2 | 1.29 | 29.8 |
| | 1800 | 154 | F0A3003018001310 | F0A3003018001300 | 447 | 776 | 840 | 9.2 | 1.29 | 33.5 |
| | 2000 | 154 | F0A3003020001310 | F0A3003020001300 | 496 | 862 | 933 | 10.2 | 1.29 | 38.0 |
| | 2300 | 154 | F0A3003023001310 | F0A3003023001300 | 571 | 991 | 1073 | 11.7 | 1.29 | 42.5 |
| | 2600 | 154 | F0A3003026001310 | F0A3003026001300 | 645 | 1120 | 1213 | 13.3 | 1.29 | 48.4 |
| | 3000 | 154 | F0A3003030001310 | F0A3003030001300 | 745 | 1293 | 1400 | 15.3 | 1.29 | 57.5 |

# 500

| AUGSTUMS 500 mm | GARUMS | DZIĻUMS | | | Jauda (W) 45/35/20°C | Jauda (W) 55/45/20°C | Jauda (W) 60/45/20°C | TILPUMS (l) | N-ekponents | SVARS (kg) |
|---|---|---|---|---|---|---|---|---|---|---|
| **Tips 10** | | | | | | | | | | |
| | 400 | 49 | F0A1005004001310 | F0A1005004001300 | 61 | 105 | 114 | 1.1 | 1.28 | 6.8 |
| | 500 | 49 | F0A1005005001310 | F0A1005005001300 | 76 | 131 | 142 | 1.4 | 1.28 | 8.2 |
| | 600 | 49 | F0A1005006001310 | F0A1005006001300 | 91 | 158 | 171 | 1.6 | 1.28 | 9.6 |
| | 700 | 49 | F0A1005007001310 | F0A1005007001300 | 107 | 184 | 199 | 1.9 | 1.28 | 2.0 |
| | 800 | 49 | F0A1005008001310 | F0A1005008001300 | 122 | 210 | 227 | 2.2 | 1.28 | 12.3 |
| | 900 | 49 | F0A1005009001310 | F0A1005009001300 | 137 | 236 | 256 | 2.4 | 1.28 | 13.7 |
| | 1000 | 49 | F0A1005010001310 | F0A1005010001300 | 152 | 263 | 284 | 2.7 | 1.28 | 15.7 |
| | 1100 | 49 | F0A1005011001310 | F0A1005011001300 | 167 | 289 | 313 | 3.0 | 1.28 | 16.5 |
| | 1200 | 49 | F0A1005012001310 | F0A1005012001300 | 183 | 315 | 341 | 3.2 | 1.28 | 17.8 |
| | 1400 | 49 | F0A1005014001310 | F0A1005014001300 | 213 | 368 | 398 | 3.8 | 1.28 | 2.7 |
| | 1600 | 49 | F0A1005016001310 | F0A1005016001300 | 244 | 420 | 455 | 4.3 | 1.28 | 23.4 |
| | 1800 | 49 | F0A1005018001310 | F0A1005018001300 | 274 | 473 | 512 | 4.9 | 1.28 | 27.2 |
| | 2000 | 49 | F0A1005020001310 | F0A1005020001300 | 304 | 526 | 569 | 5.4 | 1.28 | 30.1 |
| | 2300 | 49 | F0A1005023001310 | F0A1005023001300 | 350 | 604 | 654 | 6.2 | 1.28 | 33.4 |
| | 2600 | 49 | F0A1005026001310 | F0A1005026001300 | 396 | 683 | 739 | 7.0 | 1.28 | 38.7 |
| | 3000 | 49 | F0A1005030001310 | F0A1005030001300 | 457 | 788 | 853 | 8.1 | 1.28 | 42.7 |
| **Tips 20** | | | | | | | | | | |
| | 400 | 104 | F0A2005004001310 | F0A2005004001300 | 106 | 183 | 198 | 2.2 | 1.28 | 10.3 |
| | 500 | 104 | F0A2005005001310 | F0A2005005001300 | 132 | 229 | 248 | 2.8 | 1.28 | 12.5 |
| | 600 | 104 | F0A2005006001310 | F0A2005006001300 | 159 | 274 | 297 | 3.3 | 1.28 | 14.2 |
| | 700 | 104 | F0A2005007001310 | F0A2005007001300 | 185 | 320 | 347 | 3.9 | 1.28 | 16.9 |
| | 800 | 104 | F0A2005008001310 | F0A2005008001300 | 212 | 366 | 396 | 4.4 | 1.28 | 18.4 |
| | 900 | 104 | F0A2005009001310 | F0A2005009001300 | 238 | 412 | 446 | 5.0 | 1.28 | 2.4 |
| | 1000 | 104 | F0A2005010001310 | F0A2005010001300 | 265 | 457 | 495 | 5.5 | 1.28 | 22.6 |
| | 1100 | 104 | F0A2005011001310 | F0A2005011001300 | 291 | 503 | 545 | 6.0 | 1.28 | 24.8 |

# 500

| AUGSTUMS 500 mm | GARUMS | DZIĻUMS | | | Jauda (W) 45/35/20°C | Jauda (W) 55/45/20°C | Jauda (W) 60/45/20°C | TILPUMS (l) | N-ekponents | SVARS (kg) |
|---|---|---|---|---|---|---|---|---|---|---|
| | 1200 | 104 | F0A2005012001310 | F0A2005012001300 | 318 | 549 | 594 | 6.6 | 1.28 | 26.9 |
| | 1400 | 104 | F0A2005014001310 | F0A2005014001300 | 371 | 640 | 693 | 7.7 | 1.28 | 32.0 |
| | 1600 | 104 | F0A2005016001310 | F0A2005016001300 | 424 | 732 | 792 | 8.8 | 1.28 | 35.3 |
| | 1800 | 104 | F0A2005018001310 | F0A2005018001300 | 477 | 823 | 891 | 9.9 | 1.28 | 39.6 |
| | 2000 | 104 | F0A2005020001310 | F0A2005020001300 | 530 | 915 | 990 | 11.0 | 1.28 | 45.5 |
| | 2300 | 104 | F0A2005023001310 | F0A2005023001300 | 609 | 1052 | 1139 | 12.7 | 1.28 | 52.1 |
| | 2600 | 104 | F0A2005026001310 | F0A2005026001300 | 689 | 1189 | 1287 | 14.3 | 1.28 | 58.8 |
| | 3000 | 104 | F0A2005030001310 | F0A2005030001300 | 794 | 1372 | 1485 | 16.5 | 1.28 | 67.5 |
| **Tips 30** | | | | | | | | | | |
| | 400 | 154 | F0A3005004001310 | F0A3005004001300 | 144 | 251 | 272 | 3.3 | 1.30 | 12.6 |
| | 500 | 154 | F0A3005005001310 | F0A3005005001300 | 180 | 313 | 340 | 4.1 | 1.30 | 15.7 |
| | 600 | 154 | F0A3005006001310 | F0A3005006001300 | 216 | 376 | 408 | 4.9 | 1.30 | 18.9 |
| | 700 | 154 | F0A3005007001310 | F0A3005007001300 | 252 | 439 | 475 | 5.7 | 1.30 | 22.0 |
| | 800 | 154 | F0A3005008001310 | F0A3005008001300 | 288 | 501 | 543 | 6.6 | 1.30 | 25.1 |
| | 900 | 154 | F0A3005009001310 | F0A3005009001300 | 324 | 564 | 611 | 7.4 | 1.30 | 28.3 |
| | 1000 | 154 | F0A3005010001310 | F0A3005010001300 | 360 | 627 | 679 | 8.2 | 1.30 | 31.4 |
| | 1100 | 154 | F0A3005011001310 | F0A3005011001300 | 396 | 689 | 747 | 9.0 | 1.30 | 33.3 |
| | 1200 | 154 | F0A3005012001310 | F0A3005012001300 | 431 | 752 | 815 | 9.8 | 1.30 | 36.3 |
| | 1400 | 154 | F0A3005014001310 | F0A3005014001300 | 503 | 877 | 951 | 11.5 | 1.30 | 42.3 |
| | 1600 | 154 | F0A3005016001310 | F0A3005016001300 | 575 | 1003 | 1087 | 13.1 | 1.30 | 48.3 |
| | 1800 | 154 | F0A3005018001310 | F0A3005018001300 | 647 | 1128 | 1223 | 14.8 | 1.30 | 54.4 |
| | 2000 | 154 | F0A3005020001310 | F0A3005020001300 | 719 | 1253 | 1358 | 16.4 | 1.30 | 62.8 |
| | 2300 | 154 | F0A3005023001310 | F0A3005023001300 | 827 | 1442 | 1562 | 18.9 | 1.30 | 72.2 |
| | 2600 | 154 | F0A3005026001310 | F0A3005026001300 | 935 | 1630 | 1766 | 21.3 | 1.30 | 81.6 |
| | 3000 | 154 | F0A3005030001310 | F0A3005030001300 | 1079 | 1880 | 2038 | 24.6 | 1.30 | 94.2 |

# 600

| AUGSTUMS 600 mm | GARUMS | DZIĻUMS | | | Jauda (W) 45/35/20°C | Jauda (W) 55/45/20°C | Jauda (W) 60/45/20°C | TILPUMS (l) | N-ekponents | SVARS (kg) |
|---|---|---|---|---|---|---|---|---|---|---|
| **Tips 10** | | | | | | | | | | |
| | 400 | 49 | F0A1006004001310 | F0A1006004001300 | 72 | 124 | 134 | 1.3 | 1.26 | 8.2 |
| | 500 | 49 | F0A1006005001310 | F0A1006005001300 | 90 | 155 | 168 | 1.6 | 1.26 | 10.1 |
| | 600 | 49 | F0A1006006001310 | F0A1006006001300 | 109 | 186 | 201 | 1.9 | 1.26 | 11.4 |
| | 700 | 49 | F0A1006007001310 | F0A1006007001300 | 127 | 217 | 235 | 2.2 | 1.26 | 13.1 |
| | 800 | 49 | F0A1006008001310 | F0A1006008001300 | 145 | 248 | 268 | 2.6 | 1.26 | 14.8 |
| | 900 | 49 | F0A1006009001310 | F0A1006009001300 | 163 | 279 | 302 | 2.9 | 1.26 | 16.5 |
| | 1000 | 49 | F0A1006010001310 | F0A1006010001300 | 181 | 310 | 335 | 3.2 | 1.26 | 18.2 |
| | 1100 | 49 | F0A1006011001310 | F0A1006011001300 | 199 | 341 | 369 | 3.5 | 1.26 | 19.9 |
| | 1200 | 49 | F0A1006012001310 | F0A1006012001300 | 217 | 372 | 403 | 3.8 | 1.26 | 21.6 |
| | 1400 | 49 | F0A1006014001310 | F0A1006014001300 | 253 | 434 | 470 | 4.5 | 1.26 | 23.8 |
| | 1600 | 49 | F0A1006016001310 | F0A1006016001300 | 289 | 496 | 537 | 5.1 | 1.26 | 28.3 |
| | 1800 | 49 | F0A1006018001310 | F0A1006018001300 | 326 | 558 | 604 | 5.8 | 1.26 | 31.7 |
| | 2000 | 49 | F0A1006020001310 | F0A1006020001300 | 362 | 621 | 671 | 6.4 | 1.26 | 35.1 |
| | 2300 | 49 | F0A1006023001310 | F0A1006023001300 | 416 | 714 | 772 | 7.4 | 1.26 | 4.2 |
| | 2600 | 49 | F0A1006026001310 | F0A1006026001300 | 470 | 807 | 872 | 8.3 | 1.26 | 45.3 |
| | 3000 | 49 | F0A1006030001310 | F0A1006030001300 | 543 | 931 | 1006 | 9.6 | 1.26 | 52.4 |
| **Tips 20** | | | | | | | | | | |
| | 400 | 104 | F0A2006004001310 | F0A2006004001300 | 122 | 210 | 228 | 2.6 | 1.29 | 11.9 |
| | 500 | 104 | F0A2006005001310 | F0A2006005001300 | 152 | 263 | 285 | 3.3 | 1.29 | 14.8 |
| | 600 | 104 | F0A2006006001310 | F0A2006006001300 | 182 | 316 | 342 | 4.0 | 1.29 | 16.8 |
| | 700 | 104 | F0A2006007001310 | F0A2006007001300 | 213 | 368 | 399 | 4.6 | 1.29 | 19.8 |
| | 800 | 104 | F0A2006008001310 | F0A2006008001300 | 243 | 421 | 456 | 5.3 | 1.29 | 22.5 |
| | 900 | 104 | F0A2006009001310 | F0A2006009001300 | 274 | 474 | 513 | 5.9 | 1.29 | 25.1 |
| | 1000 | 104 | F0A2006010001310 | F0A2006010001300 | 304 | 526 | 570 | 6.6 | 1.29 | 27.5 |
| | 1100 | 104 | F0A2006011001310 | F0A2006011001300 | 334 | 579 | 627 | 7.3 | 1.29 | 3.4 |

# 600

| AUGSTUMS 600 mm | GARUMS | DZIĻUMS | | | Jauda (W) 45/35/20°C | Jauda (W) 55/45/20°C | Jauda (W) 60/45/20°C | TILPUMS (l) | N-ekponents | SVARS (kg) |
|---|---|---|---|---|---|---|---|---|---|---|
| | 1200 | 104 | F0A2006012001310 | F0A2006012001300 | 365 | 631 | 684 | 7.9 | 1.29 | 32.8 |
| | 1400 | 104 | F0A2006014001310 | F0A2006014001300 | 426 | 737 | 798 | 9.2 | 1.29 | 38.3 |
| | 1600 | 104 | F0A2006016001310 | F0A2006016001300 | 486 | 842 | 911 | 10.6 | 1.29 | 43.6 |
| | 1800 | 104 | F0A2006018001310 | F0A2006018001300 | 547 | 947 | 1025 | 11.9 | 1.29 | 48.9 |
| | 2000 | 104 | F0A2006020001310 | F0A2006020001300 | 608 | 1052 | 1139 | 13.2 | 1.29 | 54.1 |
| | 2300 | 104 | F0A2006023001310 | F0A2006023001300 | 699 | 1210 | 1310 | 15.2 | 1.29 | 64.5 |
| | 2600 | 104 | F0A2006026001310 | F0A2006026001300 | 790 | 1368 | 1481 | 17.2 | 1.29 | 72.8 |
| | 3000 | 104 | F0A2006030001310 | F0A2006030001300 | 912 | 1579 | 1709 | 19.8 | 1.29 | 83.7 |
| **Tips 30** | | | | | | | | | | |
| | 400 | 154 | F0A3006004001310 | F0A3006004001300 | 164 | 287 | 311 | 3.9 | 1.31 | 15.2 |
| | 500 | 154 | F0A3006005001310 | F0A3006005001300 | 206 | 359 | 389 | 4.9 | 1.31 | 18.3 |
| | 600 | 154 | F0A3006006001310 | F0A3006006001300 | 247 | 431 | 467 | 5.9 | 1.31 | 22.8 |
| | 700 | 154 | F0A3006007001310 | F0A3006007001300 | 288 | 503 | 545 | 6.9 | 1.31 | 25.6 |
| | 800 | 154 | F0A3006008001310 | F0A3006008001300 | 329 | 574 | 623 | 7.8 | 1.31 | 29.2 |
| | 900 | 154 | F0A3006009001310 | F0A3006009001300 | 370 | 646 | 701 | 8.8 | 1.31 | 32.9 |
| | 1000 | 154 | F0A3006010001310 | F0A3006010001300 | 411 | 718 | 778 | 9.8 | 1.31 | 36.5 |
| | 1100 | 154 | F0A3006011001310 | F0A3006011001300 | 452 | 790 | 856 | 10.8 | 1.31 | 4.2 |
| | 1200 | 154 | F0A3006012001310 | F0A3006012001300 | 493 | 862 | 934 | 11.8 | 1.31 | 43.8 |
| | 1400 | 154 | F0A3006014001310 | F0A3006014001300 | 575 | 1005 | 1090 | 13.7 | 1.31 | 51.9 |
| | 1600 | 154 | F0A3006016001310 | F0A3006016001300 | 658 | 1149 | 1245 | 15.7 | 1.31 | 60.7 |
| | 1800 | 154 | F0A3006018001310 | F0A3006018001300 | 740 | 1292 | 1401 | 17.6 | 1.31 | 68.3 |
| | 2000 | 154 | F0A3006020001310 | F0A3006020001300 | 822 | 1436 | 1557 | 19.6 | 1.31 | 73.0 |
| | 2300 | 154 | F0A3006023001310 | F0A3006023001300 | 945 | 1651 | 1790 | 22.5 | 1.31 | 87.2 |
| | 2600 | 154 | F0A3006026001310 | F0A3006026001300 | 1069 | 1867 | 2024 | 25.5 | 1.31 | 98.6 |
| | 3000 | 154 | F0A3006030001310 | F0A3006030001300 | 1233 | 2154 | 2335 | 29.4 | 1.31 | 113.8 |

# 900

| AUGSTUMS 900 mm | GARUMS | DZIĻUMS | | | Jauda (W) 45/35/20°C | Jauda (W) 55/45/20°C | Jauda (W) 60/45/20°C | TILPUMS (l) | N-ekponents | SVARS (kg) |
|---|---|---|---|---|---|---|---|---|---|---|
| **Tips 10** | | | | | | | | | | |
| | 400 | 49 | F0A1009004001310 | F0A1009004001300 | 99 | 171 | 185 | 1.8 | 1.28 | 11.3 |
| | 500 | 49 | F0A1009005001310 | F0A1009005001300 | 124 | 214 | 231 | 2.3 | 1.28 | 13.9 |
| | 600 | 49 | F0A1009006001310 | F0A1009006001300 | 149 | 256 | 277 | 2.7 | 1.28 | 16.3 |
| | 700 | 49 | F0A1009007001310 | F0A1009007001300 | 173 | 299 | 323 | 3.1 | 1.28 | 18.9 |
| | 800 | 49 | F0A1009008001310 | F0A1009008001300 | 198 | 342 | 370 | 3.6 | 1.28 | 21.4 |
| | 900 | 49 | F0A1009009001310 | F0A1009009001300 | 223 | 384 | 416 | 4.0 | 1.28 | 23.9 |
| | 1000 | 49 | F0A1009010001310 | F0A1009010001300 | 248 | 427 | 462 | 4.5 | 1.28 | 26.4 |
| | 1100 | 49 | F0A1009011001310 | F0A1009011001300 | 272 | 470 | 508 | 5.0 | 1.28 | 29.0 |
| | 1200 | 49 | F0A1009012001310 | F0A1009012001300 | 297 | 513 | 555 | 5.4 | 1.28 | 31.5 |
| | 1400 | 49 | F0A1009014001310 | F0A1009014001300 | 347 | 598 | 647 | 6.3 | 1.28 | 36.5 |
| | 1600 | 49 | F0A1009016001310 | F0A1009016001300 | 396 | 683 | 739 | 7.2 | 1.28 | 43.2 |
| | 1800 | 49 | F0A1009018001310 | F0A1009018001300 | 446 | 769 | 832 | 8.1 | 1.28 | 46.6 |
| | 2000 | 49 | F0A1009020001310 | F0A1009020001300 | 495 | 854 | 924 | 9.0 | 1.28 | 53.8 |
| **Tips 20** | | | | | | | | | | |
| | 400 | 104 | F0A2009004001310 | F0A2009004001300 | 171 | 295 | 319 | 3.6 | 1.27 | 16.6 |
| | 500 | 104 | F0A2009005001310 | F0A2009005001300 | 214 | 368 | 398 | 4.5 | 1.27 | 2.5 |
| | 600 | 104 | F0A2009006001310 | F0A2009006001300 | 257 | 442 | 478 | 5.4 | 1.27 | 24.2 |
| | 700 | 104 | F0A2009007001310 | F0A2009007001300 | 299 | 516 | 558 | 6.3 | 1.27 | 29.1 |
| | 800 | 104 | F0A2009008001310 | F0A2009008001300 | 342 | 589 | 637 | 7.2 | 1.27 | 31.7 |
| | 900 | 104 | F0A2009009001310 | F0A2009009001300 | 385 | 663 | 717 | 8.1 | 1.27 | 35.5 |
| | 1000 | 104 | F0A2009010001310 | F0A2009010001300 | 428 | 736 | 797 | 9.0 | 1.27 | 39.4 |
| | 1100 | 104 | F0A2009011001310 | F0A2009011001300 | 471 | 810 | 876 | 9.9 | 1.27 | 44.8 |
| | 1200 | 104 | F0A2009012001310 | F0A2009012001300 | 513 | 884 | 956 | 10.8 | 1.27 | 46.9 |
| | 1400 | 104 | F0A2009014001310 | F0A2009014001300 | 599 | 1031 | 1115 | 12.6 | 1.27 | 54.4 |
| | 1600 | 104 | F0A2009016001310 | F0A2009016001300 | 685 | 1178 | 1275 | 14.4 | 1.27 | 64.4 |

# 900

| AUGSTUMS 900 mm | GARUMS | DZIĻUMS | | | Jauda (W) 45/35/20°C | Jauda (W) 55/45/20°C | Jauda (W) 60/45/20°C | TILPUMS (l) | N-ekponents | SVARS (kg) |
|---|---|---|---|---|---|---|---|---|---|---|
| | 1800 | 104 | F0A2009018001310 | F0A2009018001300 | 770 | 1326 | 1434 | 16.2 | 1.27 | 72.3 |
| | 2000 | 104 | F0A2009020001310 | F0A2009020001300 | 856 | 1473 | 1593 | 18.0 | 1.27 | 77.8 |
| **Tips 30** | | | | | | | | | | |
| | 400 | 154 | F0A3009004001310 | F0A3009004001300 | 225 | 394 | 427 | 5.3 | 1.32 | 21.8 |
| | 500 | 154 | F0A3009005001310 | F0A3009005001300 | 281 | 492 | 534 | 6.7 | 1.32 | 27.3 |
| | 600 | 154 | F0A3009006001310 | F0A3009006001300 | 337 | 591 | 640 | 8.0 | 1.32 | 31.6 |
| | 700 | 154 | F0A3009007001310 | F0A3009007001300 | 393 | 689 | 747 | 9.3 | 1.32 | 36.9 |
| | 800 | 154 | F0A3009008001310 | F0A3009008001300 | 449 | 787 | 854 | 10.6 | 1.32 | 42.3 |
| | 900 | 154 | F0A3009009001310 | F0A3009009001300 | 505 | 886 | 961 | 12.0 | 1.32 | 49.5 |
| | 1000 | 154 | F0A3009010001310 | F0A3009010001300 | 561 | 984 | 1067 | 13.3 | 1.32 | 52.9 |
| | 1100 | 154 | F0A3009011001310 | F0A3009011001300 | 618 | 1083 | 1174 | 14.6 | 1.32 | 60.6 |
| | 1200 | 154 | F0A3009012001310 | F0A3009012001300 | 674 | 1181 | 1281 | 16.0 | 1.32 | 66.1 |
| | 1400 | 154 | F0A3009014001310 | F0A3009014001300 | 786 | 1378 | 1494 | 18.6 | 1.32 | 74.3 |
| | 1600 | 154 | F0A3009016001310 | F0A3009016001300 | 898 | 1575 | 1708 | 21.3 | 1.32 | 88.3 |
| | 1800 | 154 | F0A3009018001310 | F0A3009018001300 | 1011 | 1772 | 1921 | 23.9 | 1.32 | 99.4 |
| | 2000 | 154 | F0A3009020001310 | F0A3009020001300 | 1123 | 1968 | 2135 | 26.6 | 1.32 | 110.5 |