Plan Ventil Compact (FCV)

Paneļu radiators ar plakanu priekšpusi un apakšējo pieslēgumu.

Datu lapa
2026-11-21



- Elegants izskats
- Elastīga uzstādīšana
- Augsta veiktspēja
- Izturīga konstrukcija
- Dažādi izmēri

PURMO Plan Compact paneļu radiators ar gludu priekšējo paneli pielīmētu pie profila, ar sānu paneļiem un augšējo resti, komplektā ar stiprinājumiem, atgaisotāju un aizbāzni; pieejams RAL 9016 un citās RAL krāsās.

Pielietojuma joma
Plan Ventil Compact ir piemērots gan jaunceltnēm, gan renovācijām. Ideāls novietošanai zem lieliem logiem un telpās ar ierobežotu sienas platību. Piemērots slēgtām ūdens apkures sistēmām, pieejams augstumos 200–900 mm un garumos 400–3000 mm. Nodrošina elastīgas montāžas iespējas ar sānu vai apakšējiem pieslēgumiem.

Dimensiju noteikšana
Lai nodrošinātu pareizu produktu izvēli, lūdzu, izmantojiet mūsu kalkulatoru rīkus un produktu bukletus. Ja nepieciešama palīdzība, sazinieties ar mūsu pārdošanas komandu.

Lietošana
Plan Ventil Compact jāuzstāda profesionālim, nosakot pareizo montāžas augstumu un pieslēguma tipu – apakšējo vai sānu; pārliecinies, ka integrētais vārsts ir pareizi iestatīts divcauruļu vai viencauruļu sistēmām; regulāri tīri ierīci un pēc vajadzības izmanto specializētus tīrīšanas piederumus, kā arī konsultējies ar uzstādīšanas instrukciju montāžas un regulēšanas procedūrām; nepieciešamības gadījumā pielāgo ventilācijas atveru novietojumu.

AMA teksts
Plan Ventil Compact radiatori ar pilnīgi gludu priekšējo plātni un konvekcijas elementiem aprīkoti ar sānu paneļiem un augšējo resti. Pieslēgumi: 2×G 1/2" apakšā, 4×G 1/2" sānos. Radiatorā integrēts priekšiestatāms vārsta ieliktnis. Atbilst EN442-1, CE marķējums. Komplektā MCW stiprinājumi, aizbāznis un atgaisošanas vārsts. Standarta pārklājums RAL 9016; citi toņi pēc pieprasījuma. Garantija 10 gadi.

Specifikācijas

ĪPAŠĪBAS	VIENĪBA	VĒRTĪBAS
ETIM klase		EC011022
Materiāls		Tērauds
Tips		11, 21, 22, 33
Virsmas struktūra		Līdzens gluds
Maks. darba spiediens	bar	10
Standarta pieslēgumu skaits		2
Siltuma atdeve pēc EN 442 atzītas laboratorijas		Jā
Maksimālā darbības temperatūra	°C	110
Standarta krāsa		Jā
Krāsa		Balts
RAL numurs		9016
Restes/Vāka plāksne		Jā
Restes/Vāka plāksne		Jā
Spīduma vērtība		Spīdīgs
Vītnes izmērs (collas)		1/2 inch
Pieslēguma vītne		Iekšējā vītne
Ar vienpunkta pieslēgumu		Jā
Ar ventilācijas pieslēgumu		Jā
Ar ventilācijas vārstu/gaisa atgaisotāju		Jā
Ar iztukšošanas iespēju		Jā

Resursi



ProductImage - Panel radiator Plan Ventil Compact, FCV, with flat front.

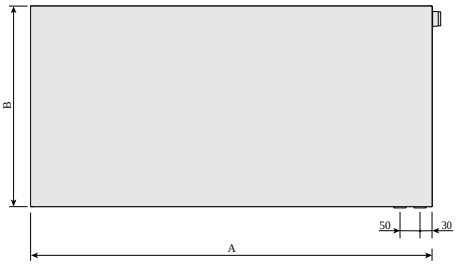

DimensionalDrawing - Plan Ventil Compact, pa labi, skats no priekšpuses

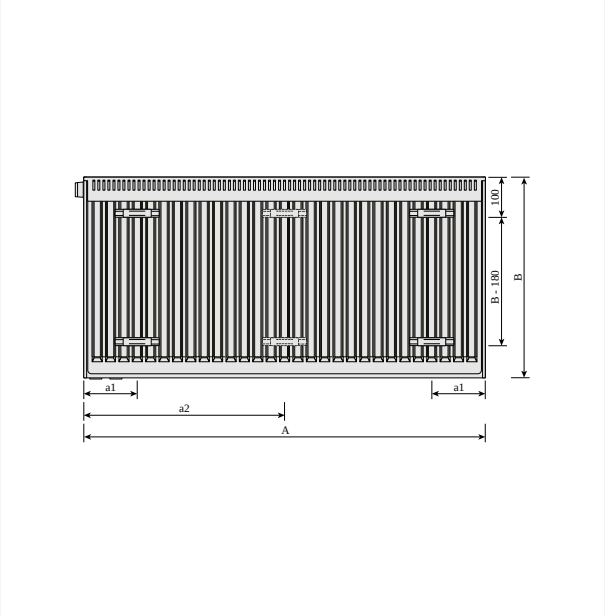

DimensionalDrawing - Plan Ventil Compact, skats no aizmugures

PLAN VENTIL COMPACT (mm)		
	FCV11	
A	a1	a2
400-1600	117	-
1800	117	917
2000	117	1017
2300	117	1150
2600	117	1317
3000	117	1517

DimensionalDrawing - Plan Ventil Compact, tabulas rasējums A

Resursi

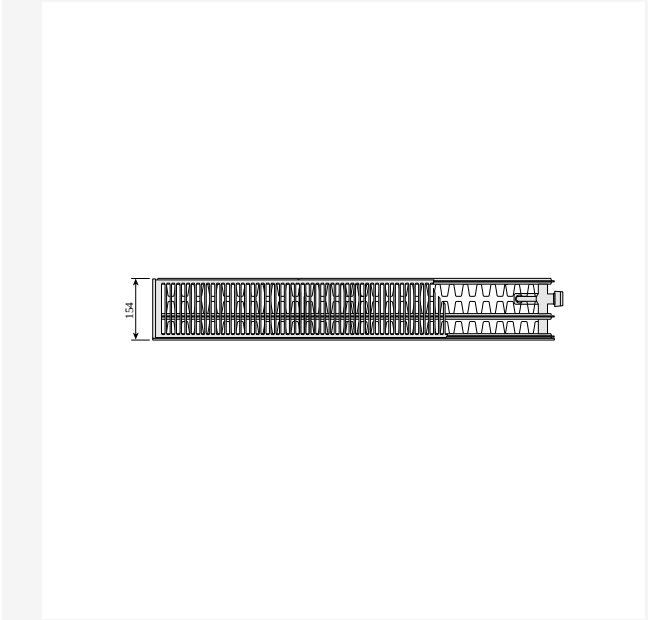

DimensionalDrawing - Plan Ventil Compact un Ramo Ventil Compact, tips 33, pa labi, skats no augšas

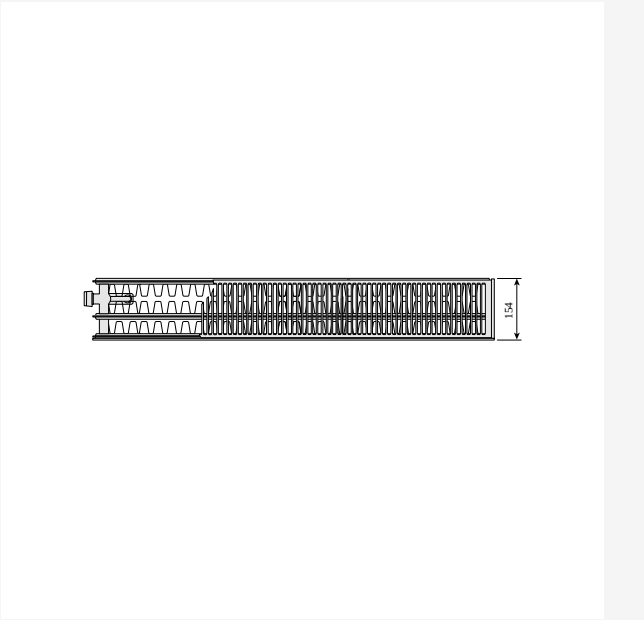

DimensionalDrawing - Plan Ventil Compact un Ramo Ventil Compact, tips 33, pa kreisi, skats no augšas

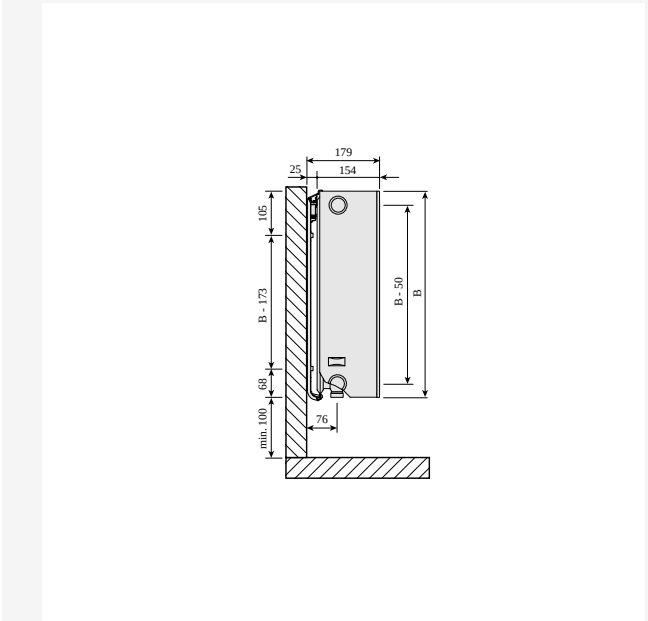

DimensionalDrawing - Plan Ventil Compact un Ramo Ventil Compact, tipi 30–33, skats no sāniem



DimensionalDrawing - Plan Ventil Compact un Ramo Ventil Compact, tips 22, pa labi, skats no augšas

Resursi



DimensionalDrawing - Plan Ventil Compact un Ramo Ventil Compact, tips 22, pa kreisi, skats no augšas

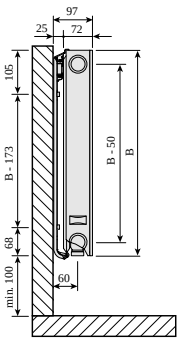

DimensionalDrawing - Plan Ventil Compact un Ramo Ventil Compact, tips 21s, skats no sāniem



DimensionalDrawing - Plan Ventil Compact un Ramo Ventil Compact, tips 21s, pa labi, skats no augšas



DimensionalDrawing - Plan Ventil Compact un Ramo Ventil Compact, tips 21s, pa kreisi, skats no augšas

Resursi

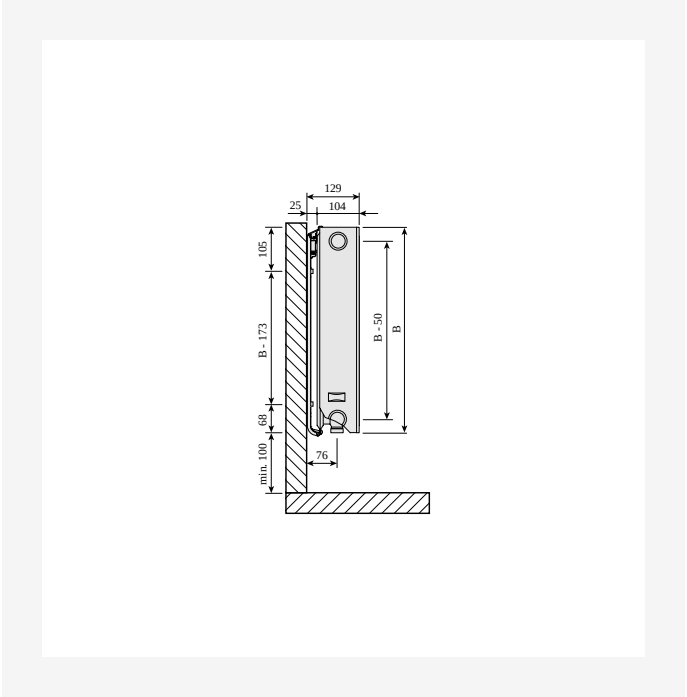

DimensionalDrawing - Plan Ventil Compact un Ramo Ventil Compact, tipi 20–22, skats no sāniem

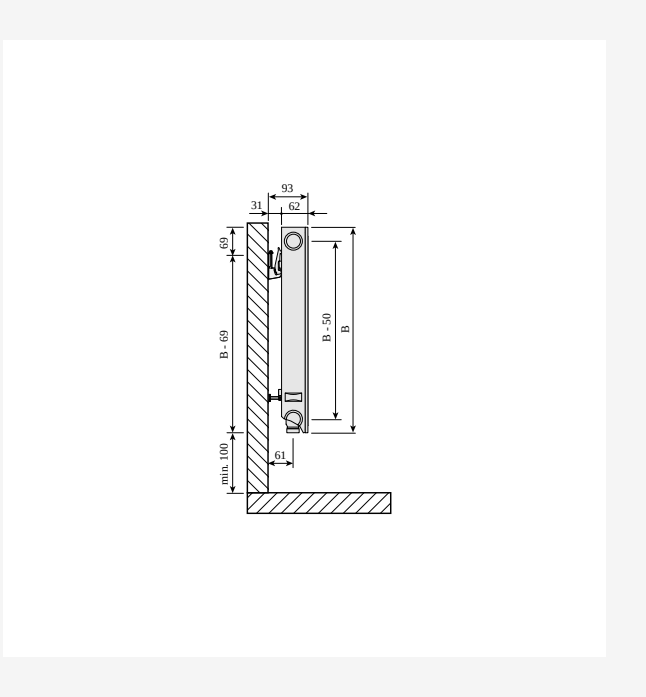

DimensionalDrawing - Plan Ventil Compact un Ramo Ventil Compact, tips 11, skats no sāniem

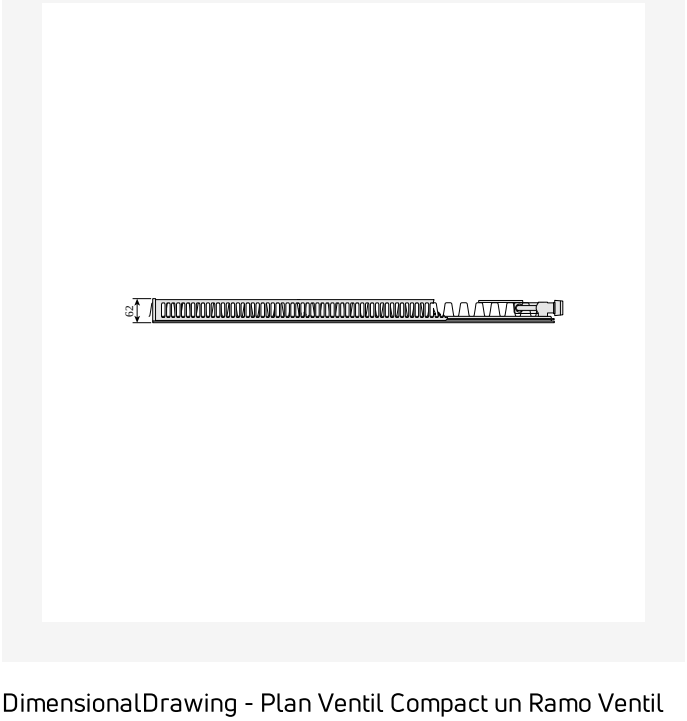

DimensionalDrawing - Plan Ventil Compact un Ramo Ventil Compact, tips 11, pa labi, skats no augšas

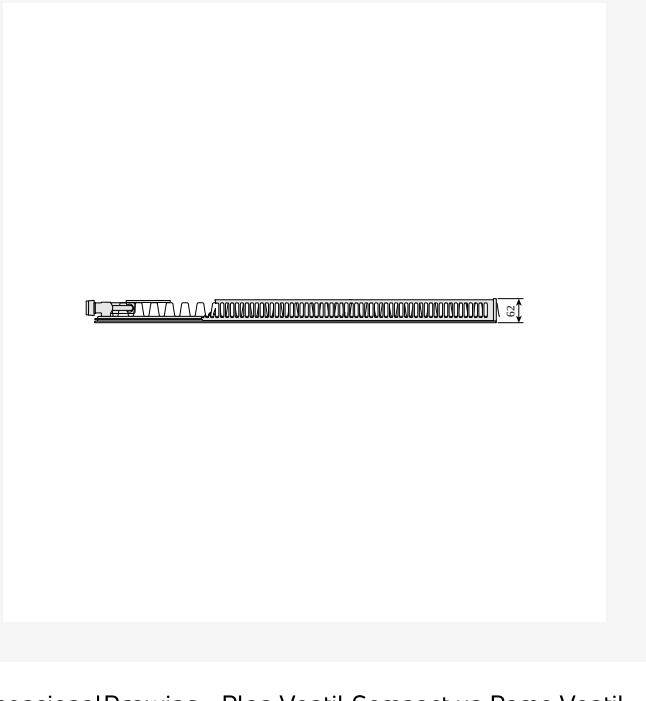

DimensionalDrawing - Plan Ventil Compact un Ramo Ventil Compact, tips 11, pa kreisi, skats no augšas

Resursi

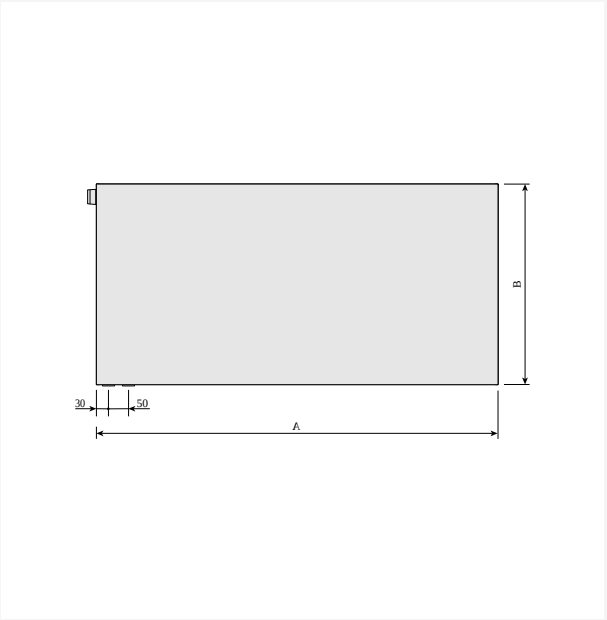

DimensionalDrawing - Plan Ventil Compact, pa kreisi, skats no priekšpuses

Saistītie produkti

Top Grill ©

Sānu panelis ©

300

AUGSTUMS 300 mm	GARUMS	DZIĻUMS			Jauda (W) 45/35/20°C	Jauda (W) 55/45/20°C	Jauda (W) 60/45/20°C	TILPUMS (l)	N-ekponents	SVARS (kg)
Tips 11										
	400	62	F0A1103004010310	3811300040	64	110	119	0.7	1.28	5.6
	500	62	F0A1103005010310	3811300050	80	137	149	0.8	1.28	6.7
	600	62	F0A1103006010310	3811300060	95	165	178	1.0	1.28	7.7
	700	62	F0A1103007010310	3811300070	111	192	208	1.2	1.28	8.8
	800	62	F0A1103008010310	3811300080	127	220	238	1.4	1.28	10.2
	900	62	F0A1103009010310	3811300090	143	247	268	1.5	1.28	1.9
	1000	62	F0A1103010010310	3811300100	159	275	297	1.7	1.28	11.9
	1100	62	F0A1103011010310	3811300110	175	302	327	1.9	1.28	13.1
	1200	62	F0A1103012010310	3811300120	191	330	357	2.0	1.28	14.6
	1400	62	F0A1103014010310	3811300140	223	385	416	2.4	1.28	16.2
	1600	62	F0A1103016010310	3811300160	254	440	476	2.7	1.28	18.3
	1800	62	F0A1103018010310	3811300180	286	495	535	3.1	1.28	2.4
	2000	62	F0A1103020010310	3811300200	318	550	595	3.4	1.28	22.5
	2300	62	F0A1103023010310	3811300230	366	632	684	3.9	1.28	25.8
	2600	62	F0A1103026010310	3811300260	413	715	773	4.4	1.28	28.9
	3000	62	F0A1103030010310	3811300300	477	824	892	5.1	1.28	33.1
Tips 21										
	400	72	3821300040L	3821300040	88	152	165	1.4	1.28	7.6
	500	72	3821300050L	3821300050	110	190	206	1.7	1.28	9.2
	600	72	3821300060L	3821300060	132	229	247	2.0	1.28	1.7
	700	72	3821300070L	3821300070	155	267	289	2.4	1.28	12.2
	800	72	3821300080L	3821300080	177	305	330	2.7	1.28	13.7
	900	72	3821300090L	3821300090	199	343	371	3.1	1.28	15.2
	1000	72	3821300100L	3821300100	221	381	412	3.4	1.28	16.7

300

AUGSTUMS 300 mm	GARUMS	DZIĻUMS			Jauda (W) 45/35/20°C	Jauda (W) 55/45/20°C	Jauda (W) 60/45/20°C	TILPUMS (l)	N-ekponents	SVARS (kg)
	1100	72	3821300110L	3821300110	243	419	453	3.7	1.28	18.2
	1200	72	3821300120L	3821300120	265	457	495	4.1	1.28	19.7
	1400	72	3821300140L	3821300140	309	533	577	4.8	1.28	22.7
	1600	72	3821300160L	3821300160	353	610	660	5.4	1.28	25.8
	1800	72	3821300180L	3821300180	397	686	742	6.1	1.28	28.8
	2000	72	3821300200L	3821300200	442	762	824	6.8	1.28	31.8
	2300	72	3821300230L	3821300230	508	876	948	7.8	1.28	36.3
	2600	72	3821300260L	3821300260	574	990	1072	8.8	1.28	4.9
	3000	72	3821300300L	3821300300	662	1143	1237	10.2	1.28	46.9
Tips 22										
	400	104	3822300040L	3822300040	111	193	209	1.4	1.30	8.6
	500	104	3822300050L	3822300050	138	241	261	1.7	1.30	1.2
	600	104	3822300060L	3822300060	166	289	314	2.0	1.30	11.9
	700	104	3822300070L	3822300070	194	338	366	2.4	1.30	13.6
	800	104	3822300080L	3822300080	222	386	418	2.7	1.30	15.2
	900	104	3822300090L	3822300090	249	434	470	3.1	1.30	16.9
	1000	104	3822300100L	3822300100	277	482	523	3.4	1.30	18.5
	1100	104	3822300110L	3822300110	305	531	575	3.7	1.30	2.2
	1200	104	3822300120L	3822300120	332	579	627	4.1	1.30	21.9
	1400	104	3822300140L	3822300140	388	675	732	4.8	1.30	25.2
	1600	104	3822300160L	3822300160	443	772	836	5.4	1.30	28.5
	1800	104	3822300180L	3822300180	499	868	941	6.1	1.30	31.8
	2000	104	3822300200L	3822300200	554	965	1045	6.8	1.30	35.1
	2300	104	3822300230L	3822300230	637	1109	1202	7.8	1.30	4.1
	2600	104	3822300260L	3822300260	720	1254	1359	8.8	1.30	45.1
	3000	104	3822300300L	3822300300	831	1447	1568	10.2	1.30	51.8

300

AUGSTUMS 300 mm	GARUMS	DZIĻUMS			Jauda (W) 45/35/20°C	Jauda (W) 55/45/20°C	Jauda (W) 60/45/20°C	TILPUMS (l)	N-ekponents	SVARS (kg)
Tips 33										
	400	154	3833300040L	3833300040	153	268	291	2.0	1.32	11.7
	500	154	3833300050L	3833300050	191	335	364	2.5	1.32	14.5
	600	154	3833300060L	3833300060	230	403	437	3.1	1.32	16.4
	700	154	3833300070L	3833300070	268	470	509	3.6	1.32	18.8
	800	154	3833300080L	3833300080	306	537	582	4.1	1.32	21.2
	900	154	3833300090L	3833300090	344	604	655	4.6	1.32	23.5
	1000	154	3833300100L	3833300100	383	671	728	5.1	1.32	25.9
	1100	154	3833300110L	3833300110	421	738	800	5.6	1.32	28.3
	1200	154	3833300120L	3833300120	459	805	873	6.1	1.32	3.6
	1400	154	3833300140L	3833300140	536	939	1019	7.1	1.32	35.4
	1600	154	3833300160L	3833300160	612	1073	1164	8.2	1.32	4.1
	1800	154	3833300180L	3833300180	689	1208	1310	9.2	1.32	44.9
	2000	154	3833300200L	3833300200	765	1342	1455	10.2	1.32	49.6
	2300	154	3833300230L	3833300230	880	1543	1674	11.7	1.32	56.8
	2600	154	3833300260L	3833300260	995	1744	1892	13.3	1.32	63.8
	3000	154	3833300300L	3833300300	1148	2013	2183	15.3	1.32	73.3

400

AUGSTUMS 400 mm	GARUMS	DZIĻUMS			Jauda (W) 45/35/20°C	Jauda (W) 55/45/20°C	Jauda (W) 60/45/20°C	TILPUMS (l)	N-ekponents	SVARS (kg)
Tips 11										
	400	62	F0A1104004010310	3811400040	82	141	153	0.9	1.28	7.4
	500	62	F0A1104005010310	3811400050	102	177	191	1.1	1.28	8.5
	600	62	F0A1104006010310	3811400060	123	212	229	1.3	1.28	10.4
	700	62	F0A1104007010310	3811400070	143	247	268	1.5	1.28	11.4
	800	62	F0A1104008010310	3811400080	163	283	306	1.8	1.28	12.8
	900	62	F0A1104009010310	3811400090	184	318	344	2.0	1.28	14.3
	1000	62	F0A1104010010310	3811400100	204	353	382	2.2	1.28	15.7
	1100	62	F0A1104011010310	3811400110	225	389	421	2.4	1.28	17.1
	1200	62	F0A1104012010310	3811400120	245	424	459	2.6	1.28	18.6
	1400	62	F0A1104014010310	3811400140	286	494	535	3.1	1.28	21.4
	1600	62	F0A1104016010310	3811400160	327	565	612	3.5	1.28	24.3
	1800	62	F0A1104018010310	3811400180	368	636	688	4.0	1.28	27.2
	2000	62	F0A1104020010310	3811400200	409	706	765	4.4	1.28	3.2
	2300	62	F0A1104023010310	3811400230	470	812	879	5.1	1.28	34.3
	2600	62	F0A1104026010310	3811400260	531	918	994	5.7	1.28	38.6
	3000	62	F0A1104030010310	3811400300	613	1060	1147	6.6	1.28	44.4
Tips 21										
	400	72	3821400040L	3821400040	111	193	209	1.8	1.28	10.4
	500	72	3821400050L	3821400050	139	241	261	2.3	1.28	12.0
	600	72	3821400060L	3821400060	167	289	313	2.7	1.28	14.0
	700	72	3821400070L	3821400070	195	337	365	3.1	1.28	16.0
	800	72	3821400080L	3821400080	223	386	417	3.6	1.28	18.0
	900	72	3821400090L	3821400090	251	434	470	4.0	1.28	20.0
	1000	72	3821400100L	3821400100	279	482	522	4.5	1.28	22.0
	1100	72	3821400110L	3821400110	306	530	574	5.0	1.28	24.0

400

AUGSTUMS 400 mm	GARUMS	DZIĻUMS			Jauda (W) 45/35/20°C	Jauda (W) 55/45/20°C	Jauda (W) 60/45/20°C	TILPUMS (l)	N-ekponents	SVARS (kg)
	1200	72	3821400120L	3821400120	334	578	626	5.4	1.28	26.0
	1400	72	3821400140L	3821400140	390	675	730	6.3	1.28	30.0
	1600	72	3821400160L	3821400160	446	771	835	7.2	1.28	34.0
	1800	72	3821400180L	3821400180	501	868	939	8.1	1.28	38.3
	2000	72	3821400200L	3821400200	557	964	1044	9.0	1.28	42.5
	2300	72	3821400230L	3821400230	641	1109	1200	10.3	1.28	48.8
	2600	72	3821400260L	3821400260	724	1253	1357	11.7	1.28	54.2
	3000	72	3821400300L	3821400300	836	1446	1565	13.5	1.28	62.3
Tips 22										
	400	104	3822400040L	3822400040	140	245	266	1.8	1.31	11.5
	500	104	3822400050L	3822400050	175	307	333	2.3	1.31	13.4
	600	104	3822400060L	3822400060	211	368	399	2.7	1.31	15.6
	700	104	3822400070L	3822400070	246	430	466	3.1	1.31	17.9
	800	104	3822400080L	3822400080	281	491	532	3.6	1.31	2.2
	900	104	3822400090L	3822400090	316	552	599	4.0	1.31	22.4
	1000	104	3822400100L	3822400100	351	614	665	4.5	1.31	24.7
	1100	104	3822400110L	3822400110	386	675	732	5.0	1.31	27.0
	1200	104	3822400120L	3822400120	421	736	798	5.4	1.31	29.2
	1400	104	3822400140L	3822400140	491	859	931	6.3	1.31	33.8
	1600	104	3822400160L	3822400160	561	982	1064	7.2	1.31	38.3
	1800	104	3822400180L	3822400180	632	1104	1197	8.1	1.31	42.8
	2000	104	3822400200L	3822400200	702	1227	1331	9.0	1.31	47.4
	2300	104	3822400230L	3822400230	807	1411	1530	10.3	1.31	54.2
	2600	104	3822400260L	3822400260	912	1595	1730	11.7	1.31	7.0
	3000	104	3822400300L	3822400300	1053	1841	1996	13.5	1.31	7.5
Tips 33										

400

AUGSTUMS 400 mm	GARUMS	DZIĻUMS			Jauda (W) 45/35/20°C	Jauda (W) 55/45/20°C	Jauda (W) 60/45/20°C	TILPUMS (l)	N-ekponents	SVARS (kg)
	400	154	3833400040L	3833400040	192	338	367	2.7	1.32	15.3
	500	154	3833400050L	3833400050	240	423	459	3.4	1.32	18.5
	600	154	3833400060L	3833400060	288	508	551	4.0	1.32	21.7
	700	154	3833400070L	3833400070	336	592	643	4.7	1.32	24.9
	800	154	3833400080L	3833400080	385	677	734	5.4	1.32	28.7
	900	154	3833400090L	3833400090	433	761	826	6.0	1.32	31.3
	1000	154	3833400100L	3833400100	481	846	918	6.7	1.32	34.4
	1100	154	3833400110L	3833400110	529	930	1010	7.4	1.32	37.6
	1200	154	3833400120L	3833400120	577	1015	1102	8.0	1.32	4.8
	1400	154	3833400140L	3833400140	673	1184	1285	9.4	1.32	47.2
	1600	154	3833400160L	3833400160	769	1353	1469	10.7	1.32	53.6
	1800	154	3833400180L	3833400180	865	1523	1652	12.1	1.32	59.9
	2000	154	3833400200L	3833400200	961	1692	1836	13.4	1.32	66.3
	2300	154	3833400230L	3833400230	1106	1946	2111	15.4	1.32	75.9
	2600	154	3833400260L	3833400260	1250	2199	2387	17.4	1.32	85.4
	3000	154	3833400300L	3833400300	1442	2538	2754	20.1	1.32	102.1

500

AUGSTUMS 500 mm	GARUMS	DZIĻUMS			Jauda (W) 45/35/20°C	Jauda (W) 55/45/20°C	Jauda (W) 60/45/20°C	TILPUMS (l)	N-ekponents	SVARS (kg)
Tips 11										
	400	62	F0A1105004010310	3811500040	99	171	185	1.1	1.28	8.8
	500	62	F0A1105005010310	3811500050	124	214	231	1.4	1.28	1.5
	600	62	F0A1105006010310	3811500060	148	256	278	1.6	1.28	12.3
	700	62	F0A1105007010310	3811500070	173	299	324	1.9	1.28	14.6
	800	62	F0A1105008010310	3811500080	198	342	370	2.2	1.28	15.8
	900	62	F0A1105009010310	3811500090	223	385	416	2.4	1.28	17.6
	1000	62	F0A1105010010310	3811500100	247	427	463	2.7	1.28	19.3
	1100	62	F0A1105011010310	3811500110	272	470	509	3.0	1.28	21.1
	1200	62	F0A1105012010310	3811500120	297	513	555	3.2	1.28	22.9
	1400	62	F0A1105014010310	3811500140	346	598	648	3.8	1.28	26.4
	1600	62	F0A1105016010310	3811500160	396	684	740	4.3	1.28	29.9
	1800	62	F0A1105018010310	3811500180	445	769	833	4.9	1.28	33.4
	2000	62	F0A1105020010310	3811500200	495	855	925	5.4	1.28	37.0
	2300	62	F0A1105023010310	3811500230	569	983	1064	6.2	1.28	42.2
	2600	62	F0A1105026010310	3811500260	643	1111	1203	7.0	1.28	47.5
	3000	62	F0A1105030010310	3811500300	742	1282	1388	8.1	1.28	54.6
Tips 21										
	400	72	3821500040L	3821500040	133	230	249	2.2	1.29	12.0
	500	72	3821500050L	3821500050	166	288	312	2.8	1.29	14.6
	600	72	3821500060L	3821500060	199	345	374	3.3	1.29	17.5
	700	72	3821500070L	3821500070	232	403	436	3.9	1.29	19.6
	800	72	3821500080L	3821500080	266	461	499	4.4	1.29	22.2
	900	72	3821500090L	3821500090	299	518	561	5.0	1.29	24.6
	1000	72	3821500100L	3821500100	332	576	623	5.5	1.29	27.2
	1100	72	3821500110L	3821500110	365	633	686	6.0	1.29	29.7

500

AUGSTUMS 500 mm	GARUMS	DZIĻUMS			Jauda (W) 45/35/20°C	Jauda (W) 55/45/20°C	Jauda (W) 60/45/20°C	TILPUMS (l)	N-ekponents	SVARS (kg)
	1200	72	3821500120L	3821500120	398	691	748	6.6	1.29	32.3
	1400	72	3821500140L	3821500140	465	806	873	7.7	1.29	37.3
	1600	72	3821500160L	3821500160	531	921	997	8.8	1.29	42.4
	1800	72	3821500180L	3821500180	597	1036	1122	9.9	1.29	47.5
	2000	72	3821500200L	3821500200	664	1151	1247	11.0	1.29	52.5
	2300	72	3821500230L	3821500230	763	1324	1434	12.7	1.29	6.1
	2600	72	3821500260L	3821500260	863	1497	1621	14.3	1.29	67.8
	3000	72	3821500300L	3821500300	996	1727	1870	16.5	1.29	77.9
Tips 22										
	400	104	3822500040L	3822500040	168	294	319	2.2	1.32	13.7
	500	104	3822500050L	3822500050	210	368	399	2.8	1.32	16.5
	600	104	3822500060L	3822500060	251	442	479	3.3	1.32	19.3
	700	104	3822500070L	3822500070	293	515	559	3.9	1.32	22.2
	800	104	3822500080L	3822500080	335	589	639	4.4	1.32	25.0
	900	104	3822500090L	3822500090	377	662	718	5.0	1.32	27.8
	1000	104	3822500100L	3822500100	419	736	798	5.5	1.32	3.6
	1100	104	3822500110L	3822500110	461	809	878	6.0	1.32	33.4
	1200	104	3822500120L	3822500120	503	883	958	6.6	1.32	36.2
	1400	104	3822500140L	3822500140	587	1030	1118	7.7	1.32	41.9
	1600	104	3822500160L	3822500160	670	1177	1277	8.8	1.32	47.5
	1800	104	3822500180L	3822500180	754	1325	1437	9.9	1.32	53.2
	2000	104	3822500200L	3822500200	838	1472	1597	11.0	1.32	58.8
	2300	104	3822500230L	3822500230	964	1692	1836	12.7	1.32	67.2
	2600	104	3822500260L	3822500260	1089	1913	2076	14.3	1.32	75.7
	3000	104	3822500300L	3822500300	1257	2208	2395	16.5	1.32	87.0
Tips 33										

500

AUGSTUMS 500 mm	GARUMS	DZIĻUMS			Jauda (W) 45/35/20°C	Jauda (W) 55/45/20°C	Jauda (W) 60/45/20°C	TILPUMS (l)	N-ekponents	SVARS (kg)
	400	154	3833500040L	3833500040	229	404	438	3.3	1.33	18.8
	500	154	3833500050L	3833500050	286	505	548	4.1	1.33	22.8
	600	154	3833500060L	3833500060	343	606	657	4.9	1.33	27.0
	700	154	3833500070L	3833500070	400	706	767	5.7	1.33	4.0
	800	154	3833500080L	3833500080	457	807	877	6.6	1.33	35.2
	900	154	3833500090L	3833500090	514	908	986	7.4	1.33	40.0
	1000	154	3833500100L	3833500100	571	1009	1096	8.2	1.33	43.2
	1100	154	3833500110L	3833500110	629	1110	1205	9.0	1.33	47.2
	1200	154	3833500120L	3833500120	686	1211	1315	9.8	1.33	51.3
	1400	154	3833500140L	3833500140	800	1413	1534	11.5	1.33	59.4
	1600	154	3833500160L	3833500160	914	1615	1753	13.1	1.33	67.6
	1800	154	3833500180L	3833500180	1029	1817	1972	14.8	1.33	75.7
	2000	154	3833500200L	3833500200	1143	2018	2192	16.4	1.33	83.8
	2300	154	3833500230L	3833500230	1314	2321	2520	18.9	1.33	96.2
	2600	154	3833500260L	3833500260	1486	2624	2849	21.3	1.33	112.5
	3000	154	3833500300L	3833500300	1714	3028	3287	24.6	1.33	124.5

600

AUGSTUMS 600 mm	GARUMS	DZIĻUMS			Jauda (W) 45/35/20°C	Jauda (W) 55/45/20°C	Jauda (W) 60/45/20°C	TILPUMS (l)	N-ekponents	SVARS (kg)
Tips 11										
	400	62	F0A1106004010310	3811600040	115	200	216	1.3	1.28	1.3
	500	62	F0A1106005010310	3811600050	144	249	270	1.6	1.28	12.4
	600	62	F0A1106006010310	3811600060	173	299	324	1.9	1.28	14.6
	700	62	F0A1106007010310	3811600070	202	349	378	2.2	1.28	16.7
	800	62	F0A1106008010310	3811600080	231	399	432	2.6	1.28	18.9
	900	62	F0A1106009010310	3811600090	260	449	486	2.9	1.28	3.0
	1000	62	F0A1106010010310	3811600100	289	499	540	3.2	1.28	23.1
	1100	62	F0A1106011010310	3811600110	317	549	594	3.5	1.28	25.2
	1200	62	F0A1106012010310	3811600120	346	599	648	3.8	1.28	27.4
	1400	62	F0A1106014010310	3811600140	404	699	756	4.5	1.28	31.6
	1600	62	F0A1106016010310	3811600160	462	798	864	5.1	1.28	35.9
	1800	62	F0A1106018010310	3811600180	519	898	972	5.8	1.28	4.2
	2000	62	F0A1106020010310	3811600200	577	998	1080	6.4	1.28	44.4
	2300	62	F0A1106023010310	3811600230	664	1148	1242	7.4	1.28	5.8
	2600	62	F0A1106026010310	3811600260	750	1297	1404	8.3	1.28	57.2
	3000	62	F0A1106030010310	3811600300	866	1497	1620	9.6	1.28	65.7
Tips 21										
	400	72	3821600040L	3821600040	153	266	288	2.6	1.30	14.4
	500	72	3821600050L	3821600050	191	332	360	3.3	1.30	17.5
	600	72	3821600060L	3821600060	229	398	432	4.0	1.30	2.5
	700	72	3821600070L	3821600070	267	465	504	4.6	1.30	23.6
	800	72	3821600080L	3821600080	306	531	576	5.3	1.30	26.6
	900	72	3821600090L	3821600090	344	598	648	5.9	1.30	29.7
	1000	72	3821600100L	3821600100	382	664	719	6.6	1.30	32.7
	1100	72	3821600110L	3821600110	420	731	791	7.3	1.30	35.8

600

AUGSTUMS 600 mm	GARUMS	DZIĻUMS			Jauda (W) 45/35/20°C	Jauda (W) 55/45/20°C	Jauda (W) 60/45/20°C	TILPUMS (l)	N-ekponents	SVARS (kg)
	1200	72	3821600120L	3821600120	458	797	863	7.9	1.30	38.8
	1400	72	3821600140L	3821600140	535	930	1007	9.2	1.30	44.9
	1600	72	3821600160L	3821600160	611	1063	1151	10.6	1.30	51.1
	1800	72	3821600180L	3821600180	687	1195	1295	11.9	1.30	57.1
	2000	72	3821600200L	3821600200	764	1328	1439	13.2	1.30	63.2
	2300	72	3821600230L	3821600230	878	1527	1655	15.2	1.30	72.4
	2600	72	3821600260L	3821600260	993	1727	1871	17.2	1.30	81.5
	3000	72	3821600300L	3821600300	1146	1992	2158	19.8	1.30	93.7
Tips 22										
	400	104	3822600040L	3822600040	193	340	369	2.6	1.33	16.4
	500	104	3822600050L	3822600050	241	425	461	3.3	1.33	19.8
	600	104	3822600060L	3822600060	289	510	553	4.0	1.33	23.3
	700	104	3822600070L	3822600070	337	595	646	4.6	1.33	26.7
	800	104	3822600080L	3822600080	386	680	738	5.3	1.33	3.2
	900	104	3822600090L	3822600090	434	765	830	5.9	1.33	33.7
	1000	104	3822600100L	3822600100	482	850	922	6.6	1.33	37.1
	1100	104	3822600110L	3822600110	530	935	1015	7.3	1.33	4.6
	1200	104	3822600120L	3822600120	578	1020	1107	7.9	1.33	44.2
	1400	104	3822600140L	3822600140	675	1190	1291	9.2	1.33	5.9
	1600	104	3822600160L	3822600160	771	1360	1476	10.6	1.33	57.8
	1800	104	3822600180L	3822600180	867	1530	1660	11.9	1.33	64.7
	2000	104	3822600200L	3822600200	964	1700	1845	13.2	1.33	71.7
	2300	104	3822600230L	3822600230	1108	1955	2122	15.2	1.33	82.3
	2600	104	3822600260L	3822600260	1253	2210	2398	17.2	1.33	92.4
	3000	104	3822600300L	3822600300	1446	2549	2767	19.8	1.33	110.4
Tips 33										

600

AUGSTUMS 600 mm	GARUMS	DZIĻUMS			Jauda (W) 45/35/20°C	Jauda (W) 55/45/20°C	Jauda (W) 60/45/20°C	TILPUMS (l)	N-ekponents	SVARS (kg)
	400	154	3833600040L	3833600040	263	465	506	3.9	1.34	22.5
	500	154	3833600050L	3833600050	328	582	632	4.9	1.34	27.4
	600	154	3833600060L	3833600060	394	698	758	5.9	1.34	32.2
	700	154	3833600070L	3833600070	459	814	885	6.9	1.34	37.9
	800	154	3833600080L	3833600080	525	931	1011	7.8	1.34	42.0
	900	154	3833600090L	3833600090	591	1047	1138	8.8	1.34	46.8
	1000	154	3833600100L	3833600100	656	1164	1264	9.8	1.34	51.7
	1100	154	3833600110L	3833600110	722	1280	1390	10.8	1.34	56.6
	1200	154	3833600120L	3833600120	788	1396	1517	11.8	1.34	61.4
	1400	154	3833600140L	3833600140	919	1629	1770	13.7	1.34	71.2
	1600	154	3833600160L	3833600160	1050	1862	2022	15.7	1.34	8.9
	1800	154	3833600180L	3833600180	1181	2094	2275	17.6	1.34	9.7
	2000	154	3833600200L	3833600200	1313	2327	2528	19.6	1.34	1.4
	2300	154	3833600230L	3833600230	1510	2676	2907	22.5	1.34	115.1
	2600	154	3833600260L	3833600260	1707	3025	3286	25.5	1.34	129.6
	3000	154	3833600300L	3833600300	1969	3491	3792	29.4	1.34	149.9

900

AUGSTUMS 900 mm	GARUMS	DZIĻUMS			Jauda (W) 45/35/20°C	Jauda (W) 55/45/20°C	Jauda (W) 60/45/20°C	TILPUMS (l)	N-ekponents	SVARS (kg)
Tips 11										
	400	62	F0A1109004010310	3811900040	159	277	300	1.8	1.30	14.9
	500	62	F0A1109005010310	3811900050	199	346	375	2.3	1.30	18.2
	600	62	F0A1109006010310	3811900060	239	416	451	2.7	1.30	21.4
	700	62	F0A1109007010310	3811900070	278	485	526	3.1	1.30	24.6
	800	62	F0A1109008010310	3811900080	318	554	601	3.6	1.30	27.9
	900	62	F0A1109009010310	3811900090	358	624	676	4.0	1.30	31.1
	1000	62	F0A1109010010310	3811900100	398	693	751	4.5	1.30	34.3
	1100	62	F0A1109011010310	3811900110	437	762	826	5.0	1.30	37.6
	1200	62	F0A1109012010310	3811900120	477	831	901	5.4	1.30	4.8
	1400	62	F0A1109014010310	3811900140	557	970	1051	6.3	1.30	47.3
	1600	62	F0A1109016010310	3811900160	636	1109	1201	7.2	1.30	53.8
	1800	62	F0A1109018010310	3811900180	716	1247	1352	8.1	1.30	6.2
	2000	62	F0A1109020010310	3811900200	795	1386	1502	9.0	1.30	66.7
Tips 21										
	400	72	3821900040L	3821900040	202	357	387	3.6	1.34	2.9
	500	72	3821900050L	3821900050	252	446	484	4.5	1.34	25.5
	600	72	3821900060L	3821900060	302	535	581	5.4	1.34	3.2
	700	72	3821900070L	3821900070	353	624	678	6.3	1.34	34.8
	800	72	3821900080L	3821900080	403	713	775	7.2	1.34	39.4
	900	72	3821900090L	3821900090	453	802	871	8.1	1.34	44.1
	1000	72	3821900100L	3821900100	504	891	968	9.0	1.34	48.7
	1100	72	3821900110L	3821900110	554	981	1065	9.9	1.34	53.4
	1200	72	3821900120L	3821900120	605	1070	1162	10.8	1.34	58.4
	1400	72	3821900140L	3821900140	705	1248	1355	12.6	1.34	67.3
	1600	72	3821900160L	3821900160	806	1426	1549	14.4	1.34	76.6

900

AUGSTUMS 900 mm	GARUMS	DZIĻUMS			Jauda (W) 45/35/20°C	Jauda (W) 55/45/20°C	Jauda (W) 60/45/20°C	TILPUMS (l)	N-ekponents	SVARS (kg)
	1800	72	3821900180L	3821900180	907	1605	1743	16.2	1.34	85.9
	2000	72	3821900200L	3821900200	1008	1783	1936	18.0	1.34	95.2
Tips 22										
	400	104	3822900040L	3822900040	260	462	502	3.6	1.35	23.9
	500	104	3822900050L	3822900050	325	578	628	4.5	1.35	28.9
	600	104	3822900060L	3822900060	390	693	753	5.4	1.35	34.9
	700	104	3822900070L	3822900070	455	809	879	6.3	1.35	39.2
	800	104	3822900080L	3822900080	520	924	1004	7.2	1.35	44.4
	900	104	3822900090L	3822900090	585	1040	1130	8.1	1.35	49.5
	1000	104	3822900100L	3822900100	650	1155	1256	9.0	1.35	54.6
	1100	104	3822900110L	3822900110	715	1271	1381	9.9	1.35	59.8
	1200	104	3822900120L	3822900120	780	1386	1507	10.8	1.35	64.9
	1400	104	3822900140L	3822900140	910	1617	1758	12.6	1.35	75.2
	1600	104	3822900160L	3822900160	1040	1848	2009	14.4	1.35	85.5
	1800	104	3822900180L	3822900180	1170	2080	2260	16.2	1.35	95.7
	2000	104	3822900200L	3822900200	1299	2311	2511	18.0	1.35	110.2
Tips 33										
	400	154	3833900040L	3833900040	354	633	688	5.3	1.36	33.8
	500	154	3833900050L	3833900050	443	791	860	6.7	1.36	4.4
	600	154	3833900060L	3833900060	531	949	1032	8.0	1.36	47.8
	700	154	3833900070L	3833900070	620	1107	1204	9.3	1.36	55.2
	800	154	3833900080L	3833900080	708	1266	1377	10.6	1.36	62.6
	900	154	3833900090L	3833900090	797	1424	1549	12.0	1.36	69.9
	1000	154	3833900100L	3833900100	885	1582	1721	13.3	1.36	77.3
	1100	154	3833900110L	3833900110	974	1740	1893	14.6	1.36	84.7
	1200	154	3833900120L	3833900120	1062	1898	2065	16.0	1.36	92.6

900

AUGSTUMS 900 mm	GARUMS	DZIĻUMS			Jauda (W) 45/35/20°C	Jauda (W) 55/45/20°C	Jauda (W) 60/45/20°C	TILPUMS (l)	N-ekponents	SVARS (kg)
	1400	154	3833900140L	3833900140	1239	2215	2409	18.6	1.36	111.1
	1600	154	3833900160L	3833900160	1416	2531	2753	21.3	1.36	121.5
	1800	154	3833900180L	3833900180	1593	2848	3097	23.9	1.36	136.3
	2000	154	3833900200L	3833900200	1770	3164	3441	26.6	1.36	151.3