Datu lapa
2026-10-14

Plan Compact (FC)

Kompakts paneļu radiators ar izsmalcinātu gludu apdari.

- Rafinēts izpildījums
- Vienmērīga siltuma sadale
- Dekoratīvā reste un sānu paneļi
- Pieejami vertikālie modeļi
- Bērnu drošs stiprinājums

Plan Compact ir tradicionāls paneļu radiators ar plakanu fronti, sānu paneliem un augšējo resti; universāls risinājums dažādiem interjeriem un pieejams plašā RAL krāsu izvēlē.

Pielietojuma joma
Plan Compact ir piemērots gan mājsaimniecību, gan komerciālām apkures sistēmām. Piedāvā elegantu, plakanu tērauda dizainu ar sānu paneļiem un augšējo resti. Piemērots 2-cauruļu sistēmām ar cirkulācijas sūkni, un pateicoties daudzajiem izmēriem, ir viegli aizvietojams esošajās instalācijās.

Dimensiju noteikšana
Lai nodrošinātu pareizu produktu izvēli, lūdzu, izmantojiet mūsu kalkulatoru rīkus un produktu bukletus. Ja nepieciešama palīdzība, sazinieties ar mūsu pārdošanas komandu.

Lietošana
Plan Compact radiatori tiek piegādāti ar atgaisošanas vārstiem un aizbāžņu komplektiem; uzstādi termostatiskos radiatoru vārstus temperatūras regulēšanai un pārliecinies, ka visi savienojumi ir nostiprināti, ievērojot uzstādīšanas norādes divcauruļu apkures sistēmām.

AMA teksts
Plan Compact plākšņu radiators ar gludu priekšējo paneli paredzēts ūdens apkures sistēmām. Radiators aprīkots ar sānu paneļiem un augšējo resti, kā arī četriem G 1/2" sānu pieslēgumiem, ļaujot pieslēgt no abām pusēm. Atbilst EN442-1 un ir marķēts ar CE. Komplektā iekļauti sienas stiprinājumi, aizbāznis un atgaisošanas vārsts. Standarta pārklājums RAL 9016, citi krāsu varianti pieejami pēc pieprasījuma. Garantija 10 gadi.

Specifikācijas

ĪPAŠĪBAS	VIENĪBA	VĒRTĪBAS
ETIM klase		EC011022
Materiāls		Tērauds
Tips		11, 21, 22, 33
Virsmas struktūra		Līdzens gluds
Maks. darba spiediens	bar	10
Standarta pieslēgumu skaits		4
Siltuma atdeve pēc EN 442 atzītas laboratorijas		Jā
Maksimālā darbības temperatūra	°C	110
Standarta krāsa		Jā
Krāsa		Balts
RAL numurs		9016
Restes/Vāka plāksne		Jā
Restes/Vāka plāksne		Jā
Spīduma vērtība		Spīdīgs
Vītnes izmērs (collas)		1/2 inch
Pieslēguma vītne		Iekšējā vītne
Ar vienpunkta pieslēgumu		Jā
Ar ventilācijas pieslēgumu		Jā
Ar ventilācijas vārstu/gaisa atgaisotāju		Jā
Ar iztukšošanas iespēju		Jā

Resursi

ProductImage - Product Picuture

ProductImage - Panel radiator Plan Compact, FC.

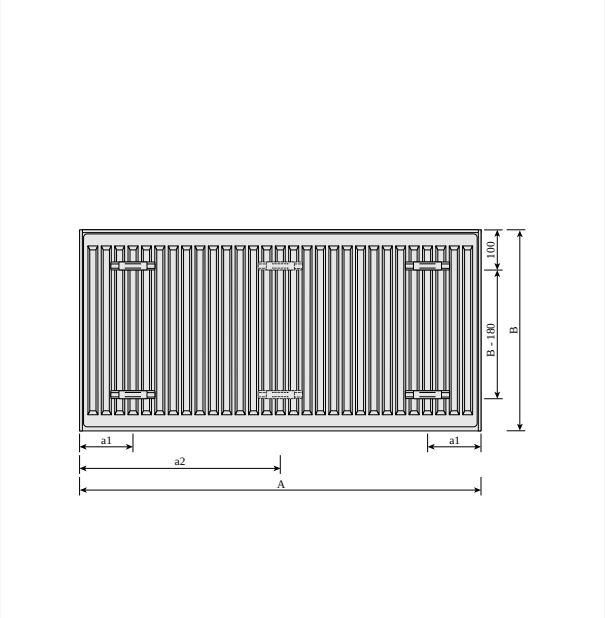

DimensionalDrawing - Plan Compact, skats no aizmugures

PLAN COMPACT (mm)				
	FC11		FC21s, FC22, FC33	
A	a1	a2	a1	a2
400-1600	117	-	133	-
1800	117	917	133	900
2000	117	1017	133	1000
2300	117	1150	133	1167
2600	117	1317	133	1300
3000	117	1517	133	1500

DimensionalDrawing - Plan Compact, tabula

Resursi

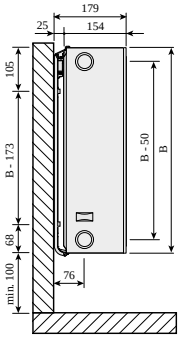

DimensionalDrawing - Plan Compact, tips 33, skats no sāniem ar Monclac sienas kronšteiniem

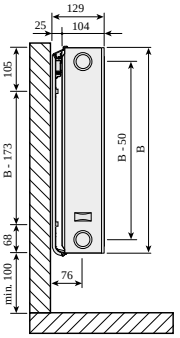

DimensionalDrawing - Plan Compact, tips 22, skats no sāniem ar Monclac sienas kronšteiniem

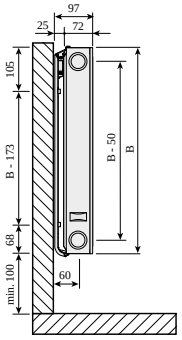

DimensionalDrawing - Plan Compact, tips 21, skats no sāniem ar Monclac sienas kronšteiniem

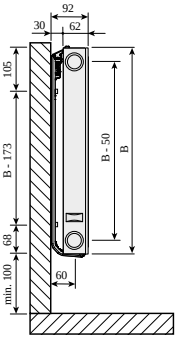

DimensionalDrawing - Plan Compact, tips 11, skats no sāniem ar Monclac sienas kronšteiniem

Resursi

DimensionalDrawing - Plan Compact, Ramo Compact, tips 33, skats no augšas

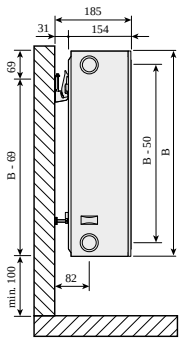

DimensionalDrawing - Plan Compact, Ramo Compact, tips 33, skats no sāniem SSMS

DimensionalDrawing - Plan Compact / Ramo Compact, tips 22, skats no augšas

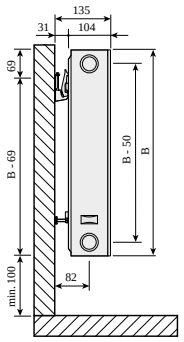

DimensionalDrawing - Plan Compact / Ramo Compact, tips 22, skats no sāniem ar SSMS sienas kronšteiniem

Resursi

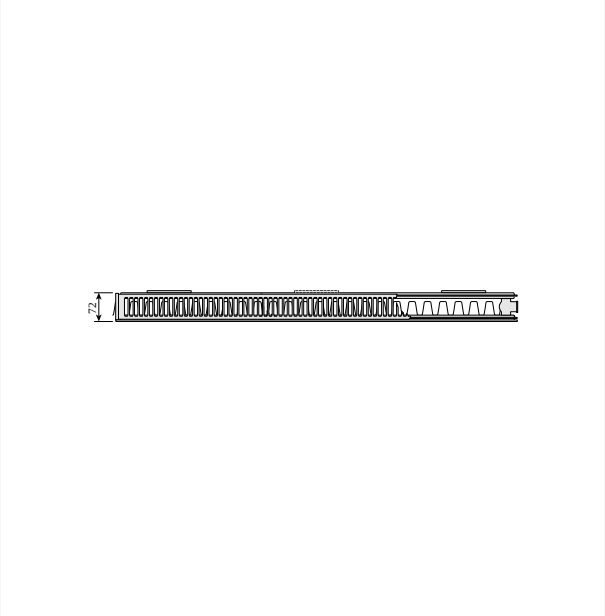

DimensionalDrawing - Plan Compact / Ramo Compact, tips 21s, skats no augšas

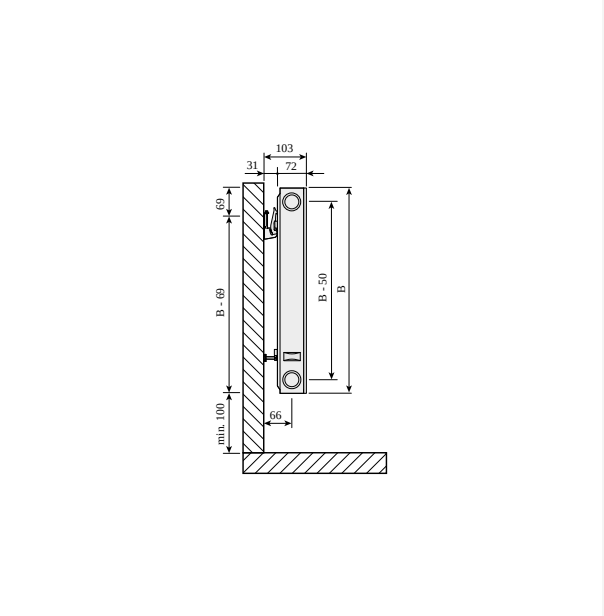

DimensionalDrawing - Plan Compact / Ramo Compact, tips 21s, skats no sāniem ar SSMS sienas kronšteiniem

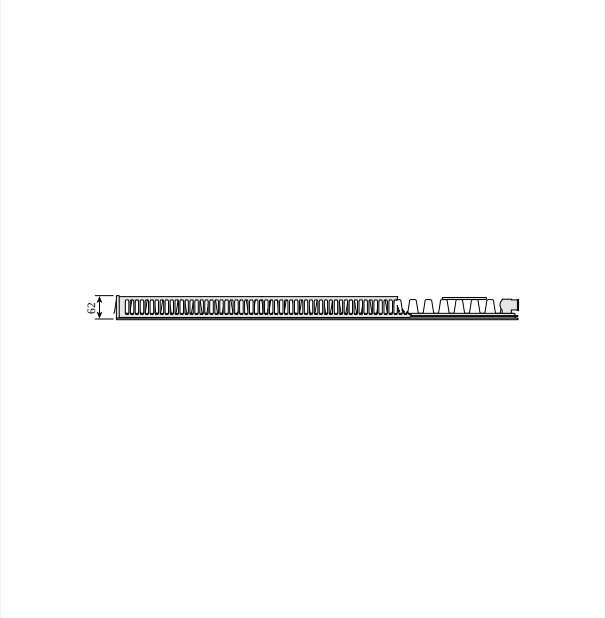

DimensionalDrawing - Plan Compact / Ramo Compact, tips 11, skats no augšas

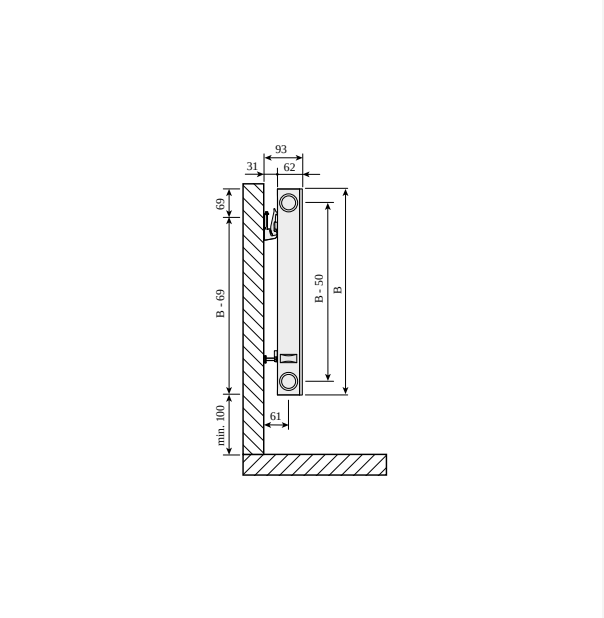

DimensionalDrawing - Plan Compact / Ramo Compact, tips 11, skats no sāniem ar SSMS sienas kronšteiniem

Resursi

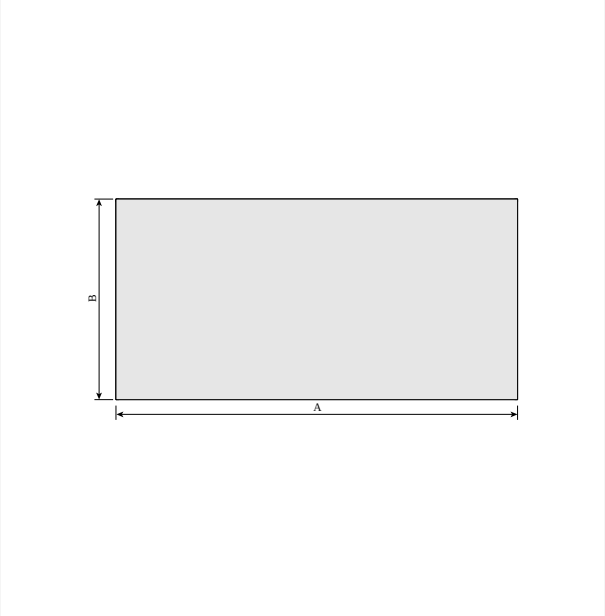

DimensionalDrawing - Plan Compact, skats no priekšpuses

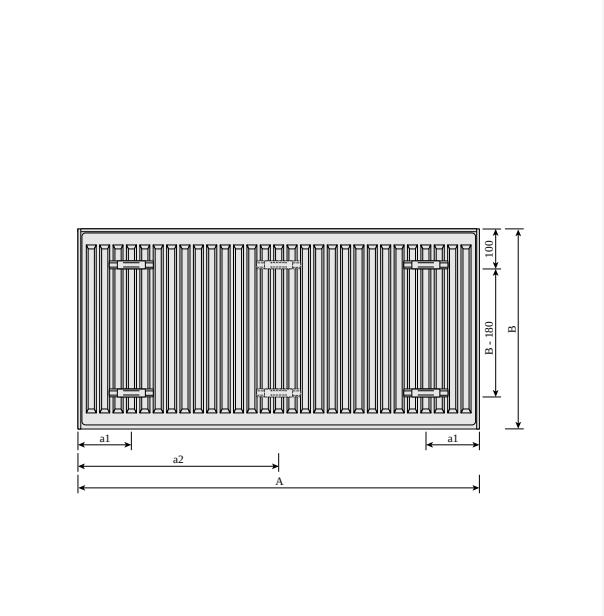

DimensionalDrawing - Compact, skats no aizmugures

Saistītie produkti

Top Grill ©

Remonta krāsa

Sānu panelis ©

300

AUGSTUMS 300 mm	GARUMS	DZIĻUMS		Jauda (W) 45/35/20°C	Jauda (W) 55/45/20°C	Jauda (W) 60/45/20°C	TILPUMS (l)	N-ekponents	SVARS (kg)
Tips 11									
	400	62	F091103004010300	64	110	119	0.7	1.28	5.5
	500	62	F091103005010300	80	137	149	0.8	1.28	6.6
	600	62	F091103006010300	95	165	178	1.0	1.28	7.6
	700	62	F091103007010300	111	192	208	1.2	1.28	8.7
	800	62	F091103008010300	127	220	238	1.4	1.28	9.8
	900	62	F091103009010300	143	247	268	1.5	1.28	1.9
	1000	62	F091103010010300	159	275	297	1.7	1.28	11.9
	1100	62	F091103011010300	175	302	327	1.9	1.28	13.2
	1200	62	F091103012010300	191	330	357	2.0	1.28	14.4
	1400	62	F091103014010300	223	385	416	2.4	1.28	16.2
	1600	62	F091103016010300	254	440	476	2.7	1.28	18.4
	1800	62	F091103018010300	286	495	535	3.1	1.28	2.5
	2000	62	F091103020010300	318	550	595	3.4	1.28	22.7
	2300	62	F091103023010300	366	632	684	3.9	1.28	25.9
	2600	62	F091103026010300	413	715	773	4.4	1.28	29.1
	3000	62	F091103030010300	477	824	892	5.1	1.28	33.4
Tips 21									
	400	72	F092103004010300	88	152	165	1.4	1.28	7.2
	500	72	F092103005010300	110	190	206	1.7	1.28	8.8
	600	72	F092103006010300	132	229	247	2.0	1.28	1.3
	700	72	F092103007010300	155	267	289	2.4	1.28	11.9
	800	72	F092103008010300	177	305	330	2.7	1.28	13.4
	900	72	F092103009010300	199	343	371	3.1	1.28	14.9
	1000	72	F092103010010300	221	381	412	3.4	1.28	16.5

300

AUGSTUMS 300 mm	GARUMS	DZIĻUMS		Jauda (W) 45/35/20°C	Jauda (W) 55/45/20°C	Jauda (W) 60/45/20°C	TILPUMS (l)	N-ekponents	SVARS (kg)
	1100	72	F092103011010300	243	419	453	3.7	1.28	18.1
	1200	72	F092103012010300	265	457	495	4.1	1.28	19.5
	1400	72	F092103014010300	309	533	577	4.8	1.28	22.7
	1600	72	F092103016010300	353	610	660	5.4	1.28	25.7
	1800	72	F092103018010300	397	686	742	6.1	1.28	28.8
	2000	72	F092103020010300	442	762	824	6.8	1.28	31.9
	2300	72	F092103023010300	508	876	948	7.8	1.28	36.5
	2600	72	F092103026010300	574	990	1072	8.8	1.28	41.9
	3000	72	F092103030010300	662	1143	1237	10.2	1.28	47.2
Tips 22									
	400	104	F092203004010300	111	193	209	1.4	1.30	8.3
	500	104	F092203005010300	138	241	261	1.7	1.30	10.2
	600	104	F092203006010300	166	289	314	2.0	1.30	11.7
	700	104	F092203007010300	194	338	366	2.4	1.30	13.4
	800	104	F092203008010300	222	386	418	2.7	1.30	15.4
	900	104	F092203009010300	249	434	470	3.1	1.30	16.8
	1000	104	F092203010010300	277	482	523	3.4	1.30	18.5
	1100	104	F092203011010300	305	531	575	3.7	1.30	2.2
	1200	104	F092203012010300	332	579	627	4.1	1.30	21.9
	1400	104	F092203014010300	388	675	732	4.8	1.30	25.3
	1600	104	F092203016010300	443	772	836	5.4	1.30	28.7
	1800	104	F092203018010300	499	868	941	6.1	1.30	32.2
	2000	104	F092203020010300	554	965	1045	6.8	1.30	35.6
	2300	104	F092203023010300	637	1109	1202	7.8	1.30	4.7
	2600	104	F092203026010300	720	1254	1359	8.8	1.30	45.8
	3000	104	F092203030010300	831	1447	1568	10.2	1.30	52.6

300

AUGSTUMS 300 mm	GARUMS	DZIĻUMS		Jauda (W) 45/35/20°C	Jauda (W) 55/45/20°C	Jauda (W) 60/45/20°C	TILPUMS (l)	N-ekponents	SVARS (kg)
Tips 33									
	400	154	F093303004010300	153	268	291	2.0	1.32	11.5
	500	154	F093303005010300	191	335	364	2.5	1.32	13.9
	600	154	F093303006010300	230	403	437	3.1	1.32	16.3
	700	154	F093303007010300	268	470	509	3.6	1.32	18.7
	800	154	F093303008010300	306	537	582	4.1	1.32	21.1
	900	154	F093303009010300	344	604	655	4.6	1.32	23.5
	1000	154	F093303010010300	383	671	728	5.1	1.32	25.9
	1100	154	F093303011010300	421	738	800	5.6	1.32	28.3
	1200	154	F093303012010300	459	805	873	6.1	1.32	3.7
	1400	154	F093303014010300	536	939	1019	7.1	1.32	35.6
	1600	154	F093303016010300	612	1073	1164	8.2	1.32	4.4
	1800	154	F093303018010300	689	1208	1310	9.2	1.32	45.2
	2000	154	F093303020010300	765	1342	1455	10.2	1.32	5.3
	2300	154	F093303023010300	880	1543	1674	11.7	1.32	57.3
	2600	154	F093303026010300	995	1744	1892	13.3	1.32	64.5
	3000	154	F093303030010300	1148	2013	2183	15.3	1.32	74.2

400

AUGSTUMS 400 mm	GARUMS	DZIĻUMS		Jauda (W) 45/35/20°C	Jauda (W) 55/45/20°C	Jauda (W) 60/45/20°C	TILPUMS (l)	N-ekponents	SVARS (kg)
Tips 11									
	400	62	F091104004010300	82	141	153	0.9	1.28	7.1
	500	62	F091104005010300	102	177	191	1.1	1.28	8.5
	600	62	F091104006010300	123	212	229	1.3	1.28	10.1
	700	62	F091104007010300	143	247	268	1.5	1.28	11.3
	800	62	F091104008010300	163	283	306	1.8	1.28	12.8
	900	62	F091104009010300	184	318	344	2.0	1.28	14.2
	1000	62	F091104010010300	204	353	382	2.2	1.28	15.6
	1100	62	F091104011010300	225	389	421	2.4	1.28	17.4
	1200	62	F091104012010300	245	424	459	2.6	1.28	18.5
	1400	62	F091104014010300	286	494	535	3.1	1.28	21.4
	1600	62	F091104016010300	327	565	612	3.5	1.28	24.3
	1800	62	F091104018010300	368	636	688	4.0	1.28	27.1
	2000	62	F091104020010300	409	706	765	4.4	1.28	3.5
	2300	62	F091104023010300	470	812	879	5.1	1.28	34.4
	2600	62	F091104026010300	531	918	994	5.7	1.28	38.6
	3000	62	F091104030010300	613	1060	1147	6.6	1.28	44.4
Tips 21									
	400	72	F092104004010300	111	193	209	1.8	1.28	9.3
	500	72	F092104005010300	139	241	261	2.3	1.28	11.4
	600	72	F092104006010300	167	289	313	2.7	1.28	13.4
	700	72	F092104007010300	195	337	365	3.1	1.28	15.5
	800	72	F092104008010300	223	386	417	3.6	1.28	17.5
	900	72	F092104009010300	251	434	470	4.0	1.28	19.6
	1000	72	F092104010010300	279	482	522	4.5	1.28	21.7
	1100	72	F092104011010300	306	530	574	5.0	1.28	23.7

400

AUGSTUMS 400 mm	GARUMS	DZIĻUMS		Jauda (W) 45/35/20°C	Jauda (W) 55/45/20°C	Jauda (W) 60/45/20°C	TILPUMS (l)	N-ekponents	SVARS (kg)
	1200	72	F092104012010300	334	578	626	5.4	1.28	25.8
	1400	72	F092104014010300	390	675	730	6.3	1.28	29.9
	1600	72	F092104016010300	446	771	835	7.2	1.28	34.4
	1800	72	F092104018010300	501	868	939	8.1	1.28	38.2
	2000	72	F092104020010300	557	964	1044	9.0	1.28	42.3
	2300	72	F092104023010300	641	1109	1200	10.3	1.28	48.5
	2600	72	F092104026010300	724	1253	1357	11.7	1.28	54.7
	3000	72	F092104030010300	836	1446	1565	13.5	1.28	62.9
Tips 22									
	400	104	F092204004010300	140	245	266	1.8	1.31	1.7
	500	104	F092204005010300	175	307	333	2.3	1.31	13.3
	600	104	F092204006010300	211	368	399	2.7	1.31	15.3
	700	104	F092204007010300	246	430	466	3.1	1.31	17.6
	800	104	F092204008010300	281	491	532	3.6	1.31	19.9
	900	104	F092204009010300	316	552	599	4.0	1.31	22.3
	1000	104	F092204010010300	351	614	665	4.5	1.31	24.5
	1100	104	F092204011010300	386	675	732	5.0	1.31	26.9
	1200	104	F092204012010300	421	736	798	5.4	1.31	29.7
	1400	104	F092204014010300	491	859	931	6.3	1.31	33.7
	1600	104	F092204016010300	561	982	1064	7.2	1.31	38.3
	1800	104	F092204018010300	632	1104	1197	8.1	1.31	42.9
	2000	104	F092204020010300	702	1227	1331	9.0	1.31	47.5
	2300	104	F092204023010300	807	1411	1530	10.3	1.31	54.4
	2600	104	F092204026010300	912	1595	1730	11.7	1.31	61.2
	3000	104	F092204030010300	1053	1841	1996	13.5	1.31	7.4
Tips 33									

400

AUGSTUMS 400 mm	GARUMS	DZIĻUMS		Jauda (W) 45/35/20°C	Jauda (W) 55/45/20°C	Jauda (W) 60/45/20°C	TILPUMS (l)	N-ekponents	SVARS (kg)
	400	154	F093304004010300	192	338	367	2.7	1.32	15.2
	500	154	F093304005010300	240	423	459	3.4	1.32	18.3
	600	154	F093304006010300	288	508	551	4.0	1.32	21.5
	700	154	F093304007010300	336	592	643	4.7	1.32	24.8
	800	154	F093304008010300	385	677	734	5.4	1.32	28.4
	900	154	F093304009010300	433	761	826	6.0	1.32	31.3
	1000	154	F093304010010300	481	846	918	6.7	1.32	34.5
	1100	154	F093304011010300	529	930	1010	7.4	1.32	37.8
	1200	154	F093304012010300	577	1015	1102	8.0	1.32	41.5
	1400	154	F093304014010300	673	1184	1285	9.4	1.32	47.6
	1600	154	F093304016010300	769	1353	1469	10.7	1.32	54.6
	1800	154	F093304018010300	865	1523	1652	12.1	1.32	6.6
	2000	154	F093304020010300	961	1692	1836	13.4	1.32	67.8
	2300	154	F093304023010300	1106	1946	2111	15.4	1.32	76.8
	2600	154	F093304026010300	1250	2199	2387	17.4	1.32	86.6
	3000	154	F093304030010300	1442	2538	2754	20.1	1.32	101.6

500

AUGSTUMS 500 mm	GARUMS	DZIĻUMS		Jauda (W) 45/35/20°C	Jauda (W) 55/45/20°C	Jauda (W) 60/45/20°C	TILPUMS (l)	N-ekponents	SVARS (kg)
Tips 11									
	400	62	F091105004010300	99	171	185	1.1	1.28	8.4
	500	62	F091105005010300	124	214	231	1.4	1.28	1.2
	600	62	F091105006010300	148	256	278	1.6	1.28	12.3
	700	62	F091105007010300	173	299	324	1.9	1.28	13.9
	800	62	F091105008010300	198	342	370	2.2	1.28	15.7
	900	62	F091105009010300	223	385	416	2.4	1.28	17.6
	1000	62	F091105010010300	247	427	463	2.7	1.28	19.4
	1100	62	F091105011010300	272	470	509	3.0	1.28	21.2
	1200	62	F091105012010300	297	513	555	3.2	1.28	23.5
	1400	62	F091105014010300	346	598	648	3.8	1.28	26.7
	1600	62	F091105016010300	396	684	740	4.3	1.28	3.5
	1800	62	F091105018010300	445	769	833	4.9	1.28	34.7
	2000	62	F091105020010300	495	855	925	5.4	1.28	37.7
	2300	62	F091105023010300	569	983	1064	6.2	1.28	43.2
	2600	62	F091105026010300	643	1111	1203	7.0	1.28	48.8
	3000	62	F091105030010300	742	1282	1388	8.1	1.28	56.9
Tips 21									
	400	72	F092105004010300	133	230	249	2.2	1.29	11.6
	500	72	F092105005010300	166	288	312	2.8	1.29	14.1
	600	72	F092105006010300	199	345	374	3.3	1.29	16.7
	700	72	F092105007010300	232	403	436	3.9	1.29	19.2
	800	72	F092105008010300	266	461	499	4.4	1.29	21.8
	900	72	F092105009010300	299	518	561	5.0	1.29	24.3
	1000	72	F092105010010300	332	576	623	5.5	1.29	26.9
	1100	72	F092105011010300	365	633	686	6.0	1.29	29.4

500

AUGSTUMS 500 mm	GARUMS	DZIĻUMS		Jauda (W) 45/35/20°C	Jauda (W) 55/45/20°C	Jauda (W) 60/45/20°C	TILPUMS (l)	N-ekponents	SVARS (kg)
	1200	72	F092105012010300	398	691	748	6.6	1.29	32.0
	1400	72	F092105014010300	465	806	873	7.7	1.29	37.8
	1600	72	F092105016010300	531	921	997	8.8	1.29	42.2
	1800	72	F092105018010300	597	1036	1122	9.9	1.29	47.3
	2000	72	F092105020010300	664	1151	1247	11.0	1.29	52.4
	2300	72	F092105023010300	763	1324	1434	12.7	1.29	6.5
	2600	72	F092105026010300	863	1497	1621	14.3	1.29	67.7
	3000	72	F092105030010300	996	1727	1870	16.5	1.29	77.9
Tips 22									
	400	104	F092205004010300	168	294	319	2.2	1.32	13.2
	500	104	F092205005010300	210	368	399	2.8	1.32	16.4
	600	104	F092205006010300	251	442	479	3.3	1.32	18.9
	700	104	F092205007010300	293	515	559	3.9	1.32	21.8
	800	104	F092205008010300	335	589	639	4.4	1.32	24.7
	900	104	F092205009010300	377	662	718	5.0	1.32	27.6
	1000	104	F092205010010300	419	736	798	5.5	1.32	3.5
	1100	104	F092205011010300	461	809	878	6.0	1.32	33.4
	1200	104	F092205012010300	503	883	958	6.6	1.32	36.2
	1400	104	F092205014010300	587	1030	1118	7.7	1.32	42.1
	1600	104	F092205016010300	670	1177	1277	8.8	1.32	47.8
	1800	104	F092205018010300	754	1325	1437	9.9	1.32	53.6
	2000	104	F092205020010300	838	1472	1597	11.0	1.32	59.3
	2300	104	F092205023010300	964	1692	1836	12.7	1.32	68.0
	2600	104	F092205026010300	1089	1913	2076	14.3	1.32	76.6
	3000	104	F092205030010300	1257	2208	2395	16.5	1.32	88.2
Tips 33									

500

AUGSTUMS 500 mm	GARUMS	DZIĻUMS		Jauda (W) 45/35/20°C	Jauda (W) 55/45/20°C	Jauda (W) 60/45/20°C	TILPUMS (l)	N-ekponents	SVARS (kg)
	400	154	F093305004010300	229	404	438	3.3	1.33	18.5
	500	154	F093305005010300	286	505	548	4.1	1.33	22.6
	600	154	F093305006010300	343	606	657	4.9	1.33	26.7
	700	154	F093305007010300	400	706	767	5.7	1.33	3.8
	800	154	F093305008010300	457	807	877	6.6	1.33	34.9
	900	154	F093305009010300	514	908	986	7.4	1.33	39.0
	1000	154	F093305010010300	571	1009	1096	8.2	1.33	43.1
	1100	154	F093305011010300	629	1110	1205	9.0	1.33	47.2
	1200	154	F093305012010300	686	1211	1315	9.8	1.33	51.3
	1400	154	F093305014010300	800	1413	1534	11.5	1.33	59.5
	1600	154	F093305016010300	914	1615	1753	13.1	1.33	67.7
	1800	154	F093305018010300	1029	1817	1972	14.8	1.33	75.9
	2000	154	F093305020010300	1143	2018	2192	16.4	1.33	84.5
	2300	154	F093305023010300	1314	2321	2520	18.9	1.33	96.3
	2600	154	F093305026010300	1486	2624	2849	21.3	1.33	110.8
	3000	154	F093305030010300	1714	3028	3287	24.6	1.33	125.7

550

AUGSTUMS 550 mm	GARUMS	DZIĻUMS		Jauda (W) 45/35/20°C	Jauda (W) 55/45/20°C	Jauda (W) 60/45/20°C	TILPUMS (l)	N-ekponents	SVARS (kg)
Tips 11									
	400	62	F091105504010300	107	185	201	1.2	1.28	9.4
	500	62	F091105505010300	134	232	251	1.5	1.28	11.4
	600	62	F091105506010300	161	278	301	1.8	1.28	13.4
	700	62	F091105507010300	188	325	351	2.1	1.28	15.3
	800	62	F091105508010300	215	371	402	2.4	1.28	17.3
	900	62	F091105509010300	241	417	452	2.7	1.28	19.4
	1000	62	F091105510010300	268	464	502	3.0	1.28	21.3
	1100	62	F091105511010300	295	510	552	3.3	1.28	23.3
	1200	62	F091105512010300	322	556	602	3.6	1.28	25.3
	1400	62	F091105514010300	376	649	703	4.2	1.28	29.2
	1600	62	F091105516010300	429	742	803	4.8	1.28	33.2
	1800	62	F091105518010300	483	835	903	5.4	1.28	37.2
	2000	62	F091105520010300	536	927	1004	6.0	1.28	41.1
	2300	62	F091105523010300	617	1067	1154	6.9	1.28	47.7
	2600	62	F091105526010300	697	1206	1305	7.8	1.28	53.3
	3000	62	F091105530010300	805	1391	1506	9.0	1.28	7.0
Tips 21									
	400	72	F092105504010300	143	248	269	2.4	1.29	12.5
	500	72	F092105505010300	179	310	336	3.0	1.29	15.5
	600	72	F092105506010300	214	372	403	3.7	1.29	18.5
	700	72	F092105507010300	250	435	471	4.3	1.29	21.4
	800	72	F092105508010300	286	497	538	4.9	1.29	24.3
	900	72	F092105509010300	322	559	605	5.5	1.29	27.3
	1000	72	F092105510010300	357	621	672	6.1	1.29	3.2
	1100	72	F092105511010300	393	683	740	6.7	1.29	33.2

550

AUGSTUMS 550 mm	GARUMS	DZIĻUMS		Jauda (W) 45/35/20°C	Jauda (W) 55/45/20°C	Jauda (W) 60/45/20°C	TILPUMS (l)	N-ekponents	SVARS (kg)
	1200	72	F092105512010300	429	745	807	7.3	1.29	36.2
	1400	72	F092105514010300	500	869	941	8.5	1.29	42.6
	1600	72	F092105516010300	572	993	1076	9.8	1.29	48.0
	1800	72	F092105518010300	643	1117	1210	11.0	1.29	53.9
	2000	72	F092105520010300	715	1241	1345	12.2	1.29	59.8
	2300	72	F092105523010300	822	1428	1546	14.0	1.29	68.7
	2600	72	F092105526010300	929	1614	1748	15.9	1.29	77.5
	3000	72	F092105530010300	1072	1862	2017	18.3	1.29	89.4
Tips 22									
	400	104	F092205504010300	180	317	344	2.4	1.32	14.3
	500	104	F092205505010300	225	397	431	3.0	1.32	17.6
	600	104	F092205506010300	271	476	517	3.7	1.32	2.8
	700	104	F092205507010300	316	555	603	4.3	1.32	24.1
	800	104	F092205508010300	361	635	689	4.9	1.32	27.4
	900	104	F092205509010300	406	714	775	5.5	1.32	3.6
	1000	104	F092205510010300	451	793	861	6.1	1.32	33.9
	1100	104	F092205511010300	496	873	947	6.7	1.32	37.2
	1200	104	F092205512010300	541	952	1033	7.3	1.32	4.4
	1400	104	F092205514010300	631	1111	1206	8.5	1.32	47.0
	1600	104	F092205516010300	721	1270	1378	9.8	1.32	53.5
	1800	104	F092205518010300	812	1428	1550	11.0	1.32	6.1
	2000	104	F092205520010300	902	1587	1722	12.2	1.32	66.5
	2300	104	F092205523010300	1037	1825	1981	14.0	1.32	76.3
	2600	104	F092205526010300	1172	2063	2239	15.9	1.32	86.1
	3000	104	F092205530010300	1353	2380	2583	18.3	1.32	101.1
Tips 33									

550

AUGSTUMS 550 mm	GARUMS	DZIĻUMS		Jauda (W) 45/35/20°C	Jauda (W) 55/45/20°C	Jauda (W) 60/45/20°C	TILPUMS (l)	N-ekponents	SVARS (kg)
	400	154	F093305504010300	246	435	472	3.6	1.34	2.7
	500	154	F093305505010300	307	544	590	4.5	1.34	24.6
	600	154	F093305506010300	369	652	709	5.4	1.34	29.2
	700	154	F093305507010300	430	761	827	6.3	1.34	33.8
	800	154	F093305508010300	492	870	945	7.2	1.34	38.3
	900	154	F093305509010300	553	979	1063	8.1	1.34	42.9
	1000	154	F093305510010300	614	1087	1181	9.0	1.34	47.5
	1100	154	F093305511010300	676	1196	1299	9.9	1.34	52.5
	1200	154	F093305512010300	737	1305	1417	10.8	1.34	56.6
	1400	154	F093305514010300	860	1522	1653	12.6	1.34	65.8
	1600	154	F093305516010300	983	1740	1889	14.4	1.34	74.9
	1800	154	F093305518010300	1106	1957	2126	16.2	1.34	84.4
	2000	154	F093305520010300	1229	2175	2362	18.0	1.34	93.2
	2300	154	F093305523010300	1413	2501	2716	20.7	1.34	109.0
	2600	154	F093305526010300	1598	2827	3070	23.4	1.34	12.6
	3000	154	F093305530010300	1843	3262	3543	27.0	1.34	138.9

600

AUGSTUMS 600 mm	GARUMS	DZIĻUMS		Jauda (W) 45/35/20°C	Jauda (W) 55/45/20°C	Jauda (W) 60/45/20°C	TILPUMS (l)	N-ekponents	SVARS (kg)
Tips 11									
	400	62	F091106004010300	115	200	216	1.3	1.28	1.2
	500	62	F091106005010300	144	249	270	1.6	1.28	12.4
	600	62	F091106006010300	173	299	324	1.9	1.28	14.5
	700	62	F091106007010300	202	349	378	2.2	1.28	16.7
	800	62	F091106008010300	231	399	432	2.6	1.28	18.9
	900	62	F091106009010300	260	449	486	2.9	1.28	21.4
	1000	62	F091106010010300	289	499	540	3.2	1.28	23.2
	1100	62	F091106011010300	317	549	594	3.5	1.28	25.4
	1200	62	F091106012010300	346	599	648	3.8	1.28	27.5
	1400	62	F091106014010300	404	699	756	4.5	1.28	31.9
	1600	62	F091106016010300	462	798	864	5.1	1.28	36.2
	1800	62	F091106018010300	519	898	972	5.8	1.28	4.5
	2000	62	F091106020010300	577	998	1080	6.4	1.28	44.8
	2300	62	F091106023010300	664	1148	1242	7.4	1.28	51.3
	2600	62	F091106026010300	750	1297	1404	8.3	1.28	57.8
	3000	62	F091106030010300	866	1497	1620	9.6	1.28	66.5
Tips 21									
	400	72	F092106004010300	153	266	288	2.6	1.30	13.8
	500	72	F092106005010300	191	332	360	3.3	1.30	16.9
	600	72	F092106006010300	229	398	432	4.0	1.30	2.3
	700	72	F092106007010300	267	465	504	4.6	1.30	23.1
	800	72	F092106008010300	306	531	576	5.3	1.30	26.2
	900	72	F092106009010300	344	598	648	5.9	1.30	29.3
	1000	72	F092106010010300	382	664	719	6.6	1.30	32.4
	1100	72	F092106011010300	420	731	791	7.3	1.30	35.5

600

AUGSTUMS 600 mm	GARUMS	DZIĻUMS		Jauda (W) 45/35/20°C	Jauda (W) 55/45/20°C	Jauda (W) 60/45/20°C	TILPUMS (l)	N-ekponents	SVARS (kg)
	1200	72	F092106012010300	458	797	863	7.9	1.30	38.6
	1400	72	F092106014010300	535	930	1007	9.2	1.30	44.8
	1600	72	F092106016010300	611	1063	1151	10.6	1.30	51.4
	1800	72	F092106018010300	687	1195	1295	11.9	1.30	57.2
	2000	72	F092106020010300	764	1328	1439	13.2	1.30	63.4
	2300	72	F092106023010300	878	1527	1655	15.2	1.30	72.8
	2600	72	F092106026010300	993	1727	1871	17.2	1.30	82.6
	3000	72	F092106030010300	1146	1992	2158	19.8	1.30	94.5
Tips 22									
	400	104	F092206004010300	193	340	369	2.6	1.33	16.4
	500	104	F092206005010300	241	425	461	3.3	1.33	19.6
	600	104	F092206006010300	289	510	553	4.0	1.33	23.4
	700	104	F092206007010300	337	595	646	4.6	1.33	26.5
	800	104	F092206008010300	386	680	738	5.3	1.33	3.0
	900	104	F092206009010300	434	765	830	5.9	1.33	33.5
	1000	104	F092206010010300	482	850	922	6.6	1.33	37.0
	1100	104	F092206011010300	530	935	1015	7.3	1.33	4.5
	1200	104	F092206012010300	578	1020	1107	7.9	1.33	43.9
	1400	104	F092206014010300	675	1190	1291	9.2	1.33	5.9
	1600	104	F092206016010300	771	1360	1476	10.6	1.33	57.9
	1800	104	F092206018010300	867	1530	1660	11.9	1.33	64.8
	2000	104	F092206020010300	964	1700	1845	13.2	1.33	71.8
	2300	104	F092206023010300	1108	1955	2122	15.2	1.33	82.2
	2600	104	F092206026010300	1253	2210	2398	17.2	1.33	92.7
	3000	104	F092206030010300	1446	2549	2767	19.8	1.33	108.7
Tips 33									

600

AUGSTUMS 600 mm	GARUMS	DZIĻUMS		Jauda (W) 45/35/20°C	Jauda (W) 55/45/20°C	Jauda (W) 60/45/20°C	TILPUMS (l)	N-ekponents	SVARS (kg)
	400	154	F093306004010300	263	465	506	3.9	1.34	22.4
	500	154	F093306005010300	328	582	632	4.9	1.34	27.3
	600	154	F093306006010300	394	698	758	5.9	1.34	32.3
	700	154	F093306007010300	459	814	885	6.9	1.34	37.3
	800	154	F093306008010300	525	931	1011	7.8	1.34	42.1
	900	154	F093306009010300	591	1047	1138	8.8	1.34	47.9
	1000	154	F093306010010300	656	1164	1264	9.8	1.34	52.3
	1100	154	F093306011010300	722	1280	1390	10.8	1.34	57.0
	1200	154	F093306012010300	788	1396	1517	11.8	1.34	62.0
	1400	154	F093306014010300	919	1629	1770	13.7	1.34	71.8
	1600	154	F093306016010300	1050	1862	2022	15.7	1.34	81.7
	1800	154	F093306018010300	1181	2094	2275	17.6	1.34	91.6
	2000	154	F093306020010300	1313	2327	2528	19.6	1.34	103.4
	2300	154	F093306023010300	1510	2676	2907	22.5	1.34	116.3
	2600	154	F093306026010300	1707	3025	3286	25.5	1.34	131.9
	3000	154	F093306030010300	1969	3491	3792	29.4	1.34	15.8

900

AUGSTUMS 900 mm	GARUMS	DZIĻUMS		Jauda (W) 45/35/20°C	Jauda (W) 55/45/20°C	Jauda (W) 60/45/20°C	TILPUMS (l)	N-ekponents	SVARS (kg)
Tips 11									
	400	62	F091109004010300	159	277	300	1.8	1.30	15.2
	500	62	F091109005010300	199	346	375	2.3	1.30	18.5
	600	62	F091109006010300	239	416	451	2.7	1.30	21.8
	700	62	F091109007010300	278	485	526	3.1	1.30	25.1
	800	62	F091109008010300	318	554	601	3.6	1.30	28.4
	900	62	F091109009010300	358	624	676	4.0	1.30	31.7
	1000	62	F091109010010300	398	693	751	4.5	1.30	35.3
	1100	62	F091109011010300	437	762	826	5.0	1.30	38.3
	1200	62	F091109012010300	477	831	901	5.4	1.30	41.6
	1400	62	F091109014010300	557	970	1051	6.3	1.30	48.2
	1600	62	F091109016010300	636	1109	1201	7.2	1.30	54.8
	1800	62	F091109018010300	716	1247	1352	8.1	1.30	61.4
	2000	62	F091109020010300	795	1386	1502	9.0	1.30	68.4
Tips 21									
	400	72	F092109004010300	202	357	387	3.6	1.34	2.2
	500	72	F092109005010300	252	446	484	4.5	1.34	24.8
	600	72	F092109006010300	302	535	581	5.4	1.34	29.4
	700	72	F092109007010300	353	624	678	6.3	1.34	34.0
	800	72	F092109008010300	403	713	775	7.2	1.34	38.5
	900	72	F092109009010300	453	802	871	8.1	1.34	43.2
	1000	72	F092109010010300	504	891	968	9.0	1.34	47.8
	1100	72	F092109011010300	554	981	1065	9.9	1.34	52.4
	1200	72	F092109012010300	605	1070	1162	10.8	1.34	57.0
	1400	72	F092109014010300	705	1248	1355	12.6	1.34	66.2
	1600	72	F092109016010300	806	1426	1549	14.4	1.34	75.3

900

AUGSTUMS 900 mm	GARUMS	DZIĻUMS		Jauda (W) 45/35/20°C	Jauda (W) 55/45/20°C	Jauda (W) 60/45/20°C	TILPUMS (l)	N-ekponents	SVARS (kg)
	1800	72	F092109018010300	907	1605	1743	16.2	1.34	84.6
	2000	72	F092109020010300	1008	1783	1936	18.0	1.34	93.8
Tips 22									
	400	104	F092209004010300	260	462	502	3.6	1.35	23.2
	500	104	F092209005010300	325	578	628	4.5	1.35	28.5
	600	104	F092209006010300	390	693	753	5.4	1.35	33.8
	700	104	F092209007010300	455	809	879	6.3	1.35	39.1
	800	104	F092209008010300	520	924	1004	7.2	1.35	44.4
	900	104	F092209009010300	585	1040	1130	8.1	1.35	49.8
	1000	104	F092209010010300	650	1155	1256	9.0	1.35	55.7
	1100	104	F092209011010300	715	1271	1381	9.9	1.35	6.4
	1200	104	F092209012010300	780	1386	1507	10.8	1.35	65.7
	1400	104	F092209014010300	910	1617	1758	12.6	1.35	76.3
	1600	104	F092209016010300	1040	1848	2009	14.4	1.35	86.9
	1800	104	F092209018010300	1170	2080	2260	16.2	1.35	97.6
	2000	104	F092209020010300	1299	2311	2511	18.0	1.35	110.3
Tips 33									
	400	154	F093309004010300	354	633	688	5.3	1.36	32.1
	500	154	F093309005010300	443	791	860	6.7	1.36	39.6
	600	154	F093309006010300	531	949	1032	8.0	1.36	47.2
	700	154	F093309007010300	620	1107	1204	9.3	1.36	54.7
	800	154	F093309008010300	708	1266	1377	10.6	1.36	62.2
	900	154	F093309009010300	797	1424	1549	12.0	1.36	69.7
	1000	154	F093309010010300	885	1582	1721	13.3	1.36	77.3
	1100	154	F093309011010300	974	1740	1893	14.6	1.36	84.8
	1200	154	F093309012010300	1062	1898	2065	16.0	1.36	92.3

900

AUGSTUMS 900 mm	GARUMS	DZIĻUMS		Jauda (W) 45/35/20°C	Jauda (W) 55/45/20°C	Jauda (W) 60/45/20°C	TILPUMS (l)	N-ekponents	SVARS (kg)
	1400	154	F093309014010300	1239	2215	2409	18.6	1.36	109.5
	1600	154	F093309016010300	1416	2531	2753	21.3	1.36	122.4
	1800	154	F093309018010300	1593	2848	3097	23.9	1.36	137.5
	2000	154	F093309020010300	1770	3164	3441	26.6	1.36	152.5