Datu lapa
2026-10-09

Hygiene (H)

Radiators telpām ar paaugstinātām higiēnas prasībām.

- Viegli tīrāms
- Augsta izturība
- Higiēnisks dizains
- Siltuma efektivitāte
- Daudzpusīgas montāžas iespējas

Purmo Hygiene ir higiēniskais paneļu radiators bez sānu un augšējām restēm; paredzēts telpām ar paaugstinātām sanitārajām prasībām, viegli tīrāms, standarta krāsojums RAL 9016, komplektā aizbāznis un atgaisošanas vārsts, 10 gadu garantija.

Pielietojuma joma
Higiēnas radiators — piemērots slimnīcām, laboratorijām, klīnikām. Pulverkrāsojums, izturība līdz 10 bar, noturība pret augstām temperatūrām.

Dimensiju noteikšana
Lai nodrošinātu pareizu produktu izvēli, lūdzu, izmantojiet mūsu kalkulatoru rīkus un produktu bukletus. Ja nepieciešama palīdzība, sazinieties ar mūsu pārdošanas komandu.

Lietošana
Uzstādi Purmo Hygiene paneļu radiatorus, nodrošinot atstarpi tīrīšanai un gaisa cirkulācijai, pieslēdzot tos ar četriem sānu G 1/2 savienojumiem un regulāri tīrot ar apstiprinātiem dezinfekcijas līdzekļiem, ievērojot visus drošības noteikumus un izmantojot konkrētajam modelim paredzētos stiprinājumus.

AMA teksts
Purmo Hygiene panelis paredzēts telpām ar augstām higiēnas prasībām. Izgatavots no auksti velmēta tērauda ar epoksīda pārklājumu. Atbilst EN 442-1 un iztur spiedienu līdz 10 bar un temperatūru līdz 110°C. Bez konvektoriem, sānu paneļiem un augšējās restes, kas ļauj viegli tīrīt virsmas un novērš putekļu uzkrāšanos. Pieejams vairākos izmēros un veidos (H10, H20, H30), ar elastīgu montāžu un dažādām pieslēguma iespējām. Piemērots slimnīcām, klīnikām, laboratorijām un aprūpes iestādēm.

Specifikācijas

ĪPAŠĪBAS	VIENĪBA	VĒRTĪBAS
ETIM klase		EC011022
Materiāls		Tērauds
Tips		10, 20, 30
Virsmas struktūra		Profilēts
Maks. darba spiediens	bar	10
Standarta pieslēgumu skaits		4
Siltuma atdeve pēc EN 442 atzītas laboratorijas		Jā
Maksimālā darbības temperatūra	°C	110
Standarta krāsa		Jā
Krāsa		Balts
RAL numurs		9016
Restes/Vāka plāksne		Jā
Restes/Vāka plāksne		Jā
Spīduma vērtība		Spīdīgs
Vītnes izmērs (collas)		1/2 inch
Pieslēguma vītne		Iekšējā vītne
Ar vienpunkta pieslēgumu		Jā
Ar ventilācijas pieslēgumu		Jā
Ar ventilācijas vārstu/gaisa atgaisotāju		Jā
Ar iztukšošanas iespēju		Jā

Resursi

ProductImage - Panel radiator Purmo Hygiene, H.

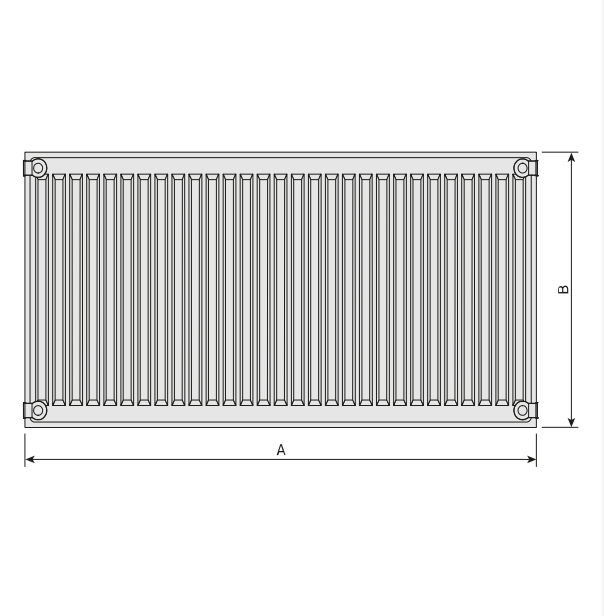

DimensionalDrawing - Hygiene, tips 10, skats no aizmugures

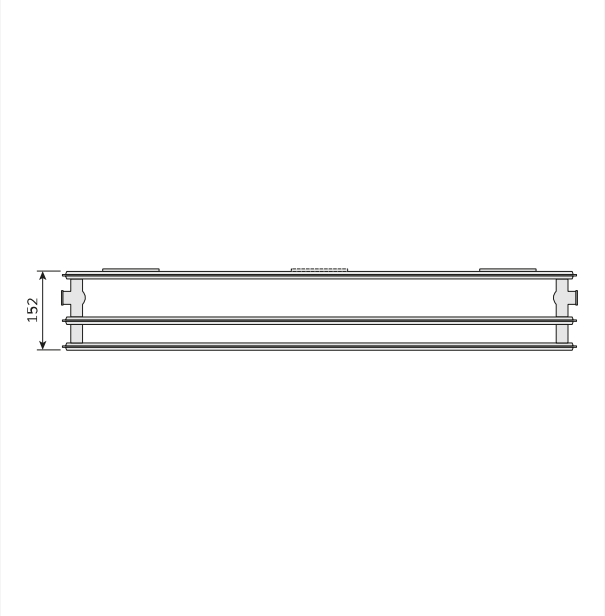

DimensionalDrawing - Hygiene, tips 30, skats no augšas

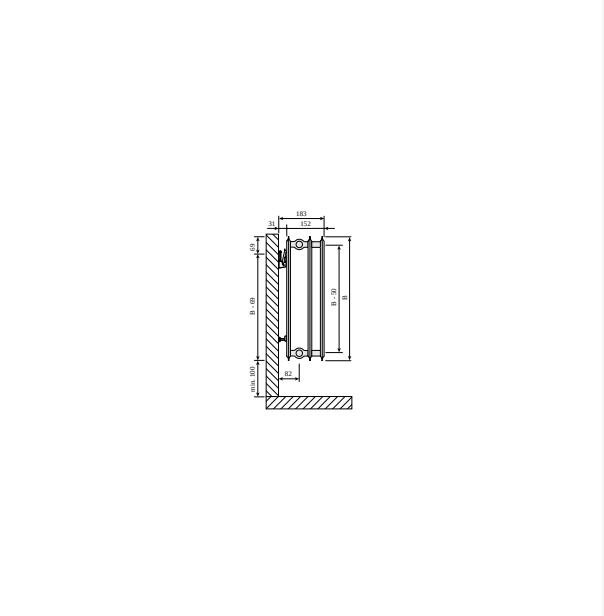

DimensionalDrawing - Drawing PR Hygiene T30 SV SSMS

Resursi

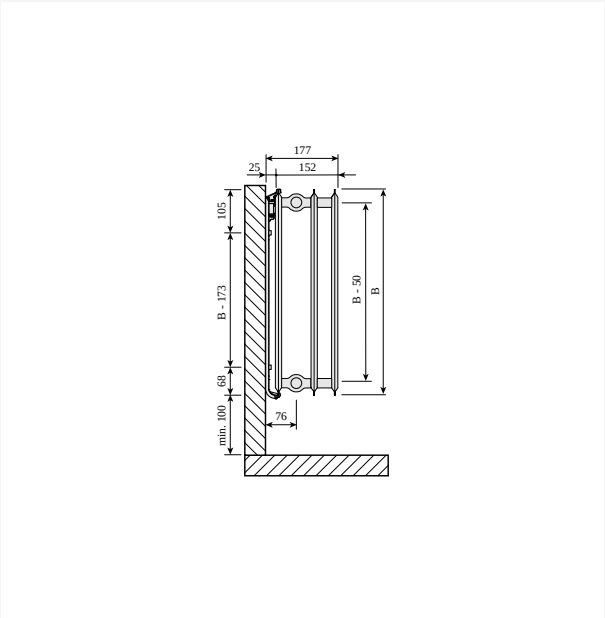

DimensionalDrawing - Hygiene, tips 30, skats no sāniem ar Monclac sienas kronšteiniem

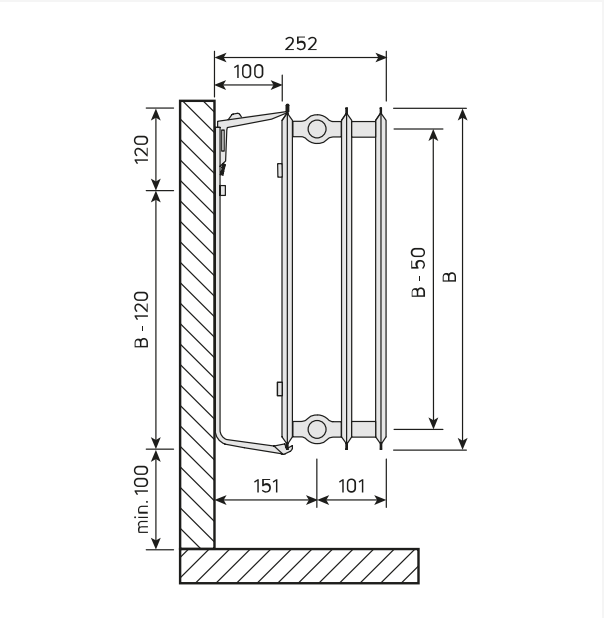

DimensionalDrawing - Hygiene, tips 30, skats no sāniem

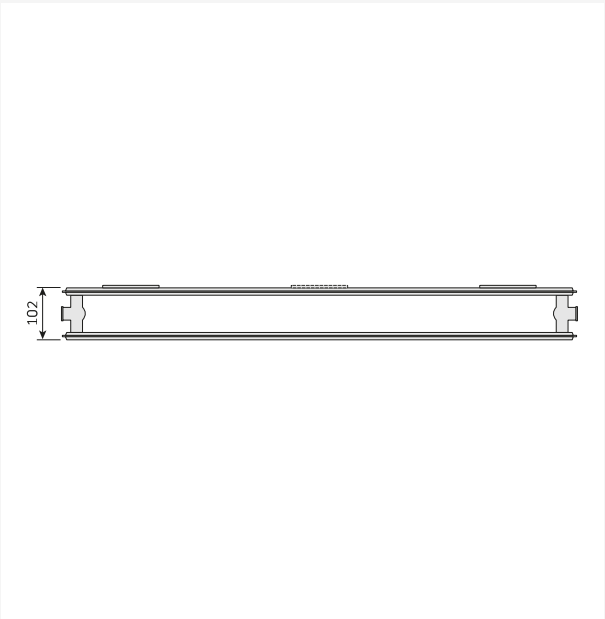

DimensionalDrawing - Hygiene, tips 20, skats no augšas

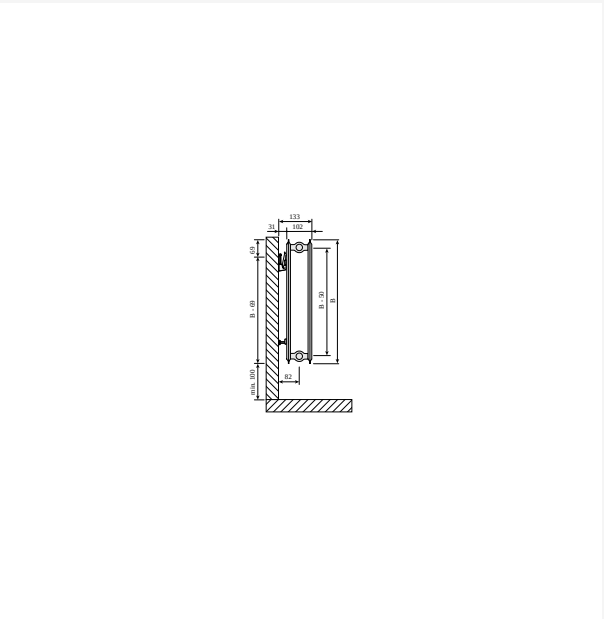

DimensionalDrawing - Drawing PR Hygiene T20 SV SSMS

Resursi

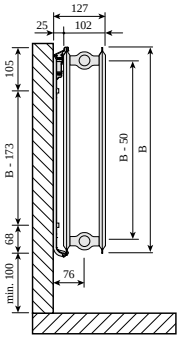

DimensionalDrawing - Hygiene, tips 20, skats no sāniem ar Monclac sienas kronšteiniem

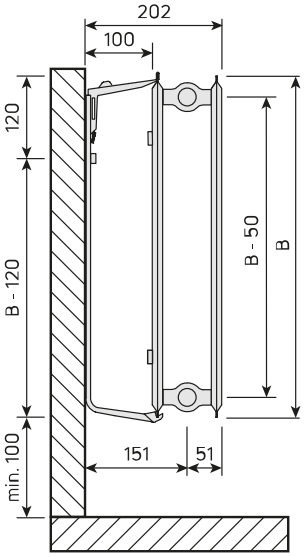

DimensionalDrawing - Hygiene, tips 20, skats no sāniem

DimensionalDrawing - Hygiene, tips 10, skats no augšas

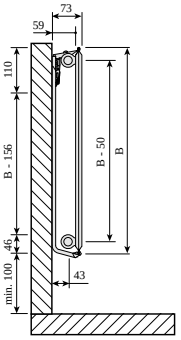

DimensionalDrawing - Hygiene, tips 10, skats no sāniem ar Monclac sienas kronšteiniem

Resursi

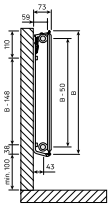

DimensionalDrawing - Hygiene, tips 10, skats no sāniem, MCK

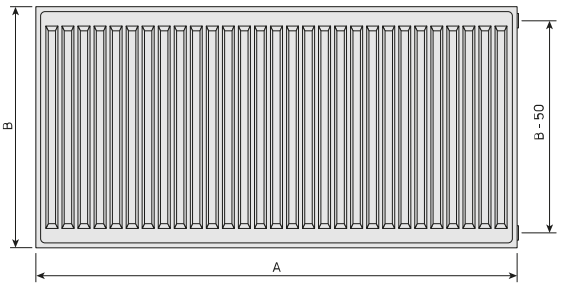

DimensionalDrawing - Hygiene, skats no priekšpuses

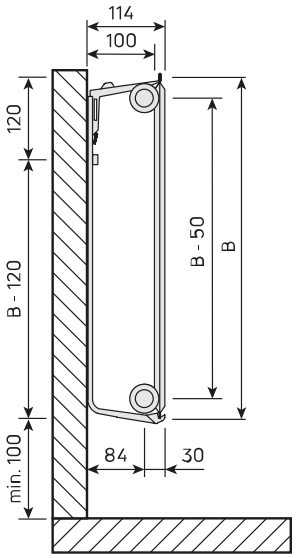

DimensionalDrawing - Hygiene, tips 10, skats no sāniem

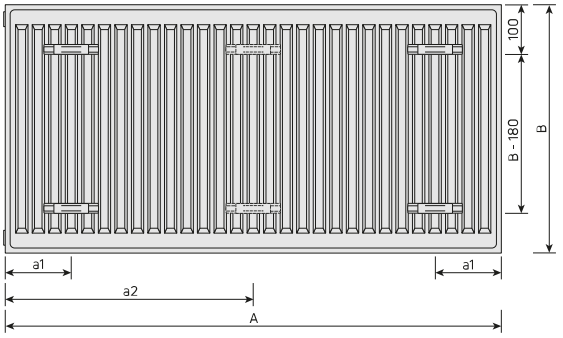

DimensionalDrawing - Hygiene, skats no aizmugures

Resursi

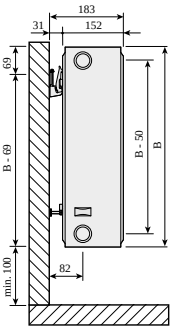

DimensionalDrawing - Compact, tips 33, skats no sāniem ar SSMS sienas kronšteiniem

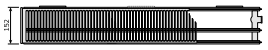

DimensionalDrawing - Hygiene Plan Compact, tips 30, skats no augšas

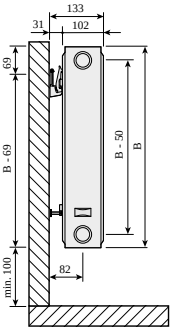

DimensionalDrawing - Compact, tips 22, skats no sāniem ar SSMS sienas kronšteiniem

DimensionalDrawing - Hygiene Compact, tips 20, skats no augšas

Saistītie produkti

Gaisa ventilis un aklā aizbāžņa komplekts

Remonta krāsa

Sienas kronšteins Monclac

Gaisa ventilēšanas atslēga

300

AUGSTUMS 300 mm	GARUMS	DZIĻUMS		Jauda (W) 45/35/20°C	Jauda (W) 55/45/20°C	Jauda (W) 60/45/20°C	TILPUMS (l)	N-ekponents	SVARS (kg)
Tips 10									
	400	47	F061003004001300	39	70	76	0.7	1.34	2.5
	500	47	F061003005001300	49	88	95	0.8	1.34	3.1
	600	47	F061003006001300	59	105	114	1.0	1.34	3.7
	700	47	F061003007001300	69	123	134	1.2	1.34	4.3
	800	47	F061003008001300	79	140	152	1.4	1.34	5.0
	900	47	F061003009001300	89	158	171	1.5	1.34	5.6
	1000	47	F061003010001300	99	175	190	1.7	1.34	6.2
	1100	47	F061003011001300	109	193	210	1.9	1.34	6.7
	1200	47	F061003012001300	119	210	229	2.0	1.34	7.3
	1400	47	F061003014001300	138	245	267	2.4	1.34	8.3
	1600	47	F061003016001300	158	280	305	2.7	1.34	9.4
	1800	47	F061003018001300	178	316	343	3.1	1.34	10.5
	2000	47	F061003020001300	198	351	381	3.4	1.34	11.5
	2300	47	F061003023001300	227	403	438	3.9	1.34	13.1
	2600	47	F061003026001300	257	456	495	4.4	1.34	14.7
	3000	47	F061003030001300	296	526	571	5.1	1.34	16.8
Tips 20									
	400	102	F062003004000300	76	131	142	1.4	1.28	4.9
	500	102	F062003005000300	95	164	177	1.7	1.28	6.0
	600	102	F062003006000300	114	196	213	2.0	1.28	7.2
	700	102	F062003007000300	133	229	248	2.4	1.28	8.2
	800	102	F062003008000300	152	262	284	2.7	1.28	9.1
	900	102	F062003009000300	170	295	319	3.1	1.28	1.2
	1000	102	F062003010000300	189	327	354	3.4	1.28	11.2

300

AUGSTUMS 300 mm	GARUMS	DZIĻUMS		Jauda (W) 45/35/20°C	Jauda (W) 55/45/20°C	Jauda (W) 60/45/20°C	TILPUMS (l)	N-ekponents	SVARS (kg)
	1100	102	F062003011000300	208	360	390	3.7	1.28	12.3
	1200	102	F062003012000300	227	393	425	4.1	1.28	13.3
	1400	102	F062003014000300	265	458	496	4.8	1.28	15.4
	1600	102	F062003016000300	303	524	567	5.4	1.28	17.5
	1800	102	F062003018000300	341	589	638	6.1	1.28	19.7
	2000	102	F062003020000300	379	655	709	6.8	1.28	21.7
	2300	102	F062003023000300	436	753	815	7.8	1.28	24.8
	2600	102	F062003026000300	493	851	921	8.8	1.28	28.0
	3000	102	F062003030000300	568	982	1063	10.2	1.28	32.2
Tips 30									
	400	152	F063003004000300	104	180	196	2.0	1.30	6.5
	500	152	F063003005000300	130	225	244	2.5	1.30	8.2
	600	152	F063003006000300	155	271	293	3.1	1.30	9.7
	700	152	F063003007000300	182	316	342	3.6	1.30	11.3
	800	152	F063003008000300	207	361	391	4.1	1.30	12.8
	900	152	F063003009000300	234	406	440	4.6	1.30	14.3
	1000	152	F063003010000300	259	451	489	5.1	1.30	15.9
	1100	152	F063003011000300	285	496	537	5.6	1.30	17.5
	1200	152	F063003012000300	311	541	586	6.1	1.30	19.4
	1400	152	F063003014000300	363	631	684	7.1	1.30	22.2
	1600	152	F063003016000300	415	721	781	8.2	1.30	25.3
	1800	152	F063003018000300	467	812	879	9.2	1.30	28.4
	2000	152	F063003020000300	519	902	977	10.2	1.30	31.6
	2300	152	F063003023000300	597	1037	1123	11.7	1.30	36.3
	2600	152	F063003026000300	674	1172	1270	13.3	1.30	5.0
	3000	152	F063003030000300	778	1353	1465	15.3	1.30	47.2

400

AUGSTUMS 400 mm	GARUMS	DZIĻUMS		Jauda (W) 45/35/20°C	Jauda (W) 55/45/20°C	Jauda (W) 60/45/20°C	TILPUMS (l)	N-ekponents	SVARS (kg)
Tips 10									
	400	47	F061004004001300	52	91	99	0.9	1.33	3.1
	500	47	F061004005001300	65	114	124	1.1	1.33	3.9
	600	47	F061004006001300	78	137	148	1.3	1.33	4.7
	700	47	F061004007001300	91	160	173	1.5	1.33	5.5
	800	47	F061004008001300	104	183	198	1.8	1.33	6.2
	900	47	F061004009001300	117	205	223	2.0	1.33	7.0
	1000	47	F061004010001300	130	228	248	2.2	1.33	7.8
	1100	47	F061004011001300	143	251	272	2.4	1.33	8.5
	1200	47	F061004012001300	156	274	297	2.6	1.33	9.2
	1400	47	F061004014001300	181	319	347	3.1	1.33	10.6
	1600	47	F061004016001300	207	365	396	3.5	1.33	12.0
	1800	47	F061004018001300	233	411	446	4.0	1.33	13.3
	2000	47	F061004020001300	259	456	495	4.4	1.33	14.7
	2300	47	F061004023001300	298	525	570	5.1	1.33	16.8
	2600	47	F061004026001300	337	593	644	5.7	1.33	18.9
	3000	47	F061004030001300	389	684	743	6.6	1.33	21.7
Tips 20									
	400	102	F062004004000300	95	163	177	1.8	1.28	6.1
	500	102	F062004005000300	118	204	221	2.3	1.28	7.5
	600	102	F062004006000300	142	245	265	2.7	1.28	8.9
	700	102	F062004007000300	165	286	310	3.1	1.28	1.2
	800	102	F062004008000300	189	327	354	3.6	1.28	11.6
	900	102	F062004009000300	212	368	398	4.0	1.28	13.3
	1000	102	F062004010000300	236	409	442	4.5	1.28	14.4
	1100	102	F062004011000300	260	449	487	5.0	1.28	15.7

400

AUGSTUMS 400 mm	GARUMS	DZIĻUMS		Jauda (W) 45/35/20°C	Jauda (W) 55/45/20°C	Jauda (W) 60/45/20°C	TILPUMS (l)	N-ekponents	SVARS (kg)
	1200	102	F062004012000300	283	490	531	5.4	1.28	17.1
	1400	102	F062004014000300	331	572	619	6.3	1.28	19.9
	1600	102	F062004016000300	378	654	708	7.2	1.28	22.6
	1800	102	F062004018000300	425	735	796	8.1	1.28	25.4
	2000	102	F062004020000300	472	817	885	9.0	1.28	28.1
	2300	102	F062004023000300	543	940	1017	10.3	1.28	32.2
	2600	102	F062004026000300	614	1062	1150	11.7	1.28	36.4
	3000	102	F062004030000300	709	1226	1327	13.5	1.28	41.9
Tips 30									
	400	152	F063004004000300	130	226	245	2.7	1.30	8.4
	500	152	F063004005000300	162	283	306	3.4	1.30	1.5
	600	152	F063004006000300	195	339	368	4.0	1.30	12.5
	700	152	F063004007000300	227	396	429	4.7	1.30	14.5
	800	152	F063004008000300	259	452	490	5.4	1.30	16.6
	900	152	F063004009000300	292	509	551	6.0	1.30	18.6
	1000	152	F063004010000300	324	565	612	6.7	1.30	2.7
	1100	152	F063004011000300	357	622	674	7.4	1.30	22.8
	1200	152	F063004012000300	389	678	735	8.0	1.30	24.8
	1400	152	F063004014000300	454	791	857	9.4	1.30	29.0
	1600	152	F063004016000300	519	904	980	10.7	1.30	33.7
	1800	152	F063004018000300	584	1017	1102	12.1	1.30	37.2
	2000	152	F063004020000300	649	1130	1225	13.4	1.30	41.3
	2300	152	F063004023000300	746	1300	1408	15.4	1.30	47.5
	2600	152	F063004026000300	844	1469	1592	17.4	1.30	53.7
	3000	152	F063004030000300	973	1695	1837	20.1	1.30	61.9

450

AUGSTUMS 450 mm	GARUMS	DZIĻUMS		Jauda (W) 45/35/20°C	Jauda (W) 55/45/20°C	Jauda (W) 60/45/20°C	TILPUMS (l)	N-ekponents	SVARS (kg)
Tips 10									
	400	47	F061004504001300	58	102	110	1.0	1.32	3.8
	500	47	F061004505001300	72	127	138	1.3	1.32	4.7
	600	47	F061004506001300	87	152	166	1.5	1.32	5.6
	700	47	F061004507001300	101	178	193	1.8	1.32	6.6
	800	47	F061004508001300	116	203	220	2.0	1.32	7.5
	900	47	F061004509001300	130	229	248	2.3	1.32	8.5
	1000	47	F061004510001300	145	254	276	2.5	1.32	9.4
	1100	47	F061004511001300	159	280	303	2.8	1.32	10.2
	1200	47	F061004512001300	174	305	331	3.0	1.32	11.0
	1400	47	F061004514001300	203	356	386	3.5	1.32	12.7
	1600	47	F061004516001300	232	407	441	4.0	1.32	14.4
	1800	47	F061004518001300	261	457	496	4.5	1.32	16.1
	2000	47	F061004520001300	290	508	551	5.0	1.32	17.8
	2300	47	F061004523001300	333	584	634	5.8	1.32	20.3
	2600	47	F061004526001300	377	661	717	6.5	1.32	22.8
	3000	47	F061004530001300	434	762	827	7.5	1.32	26.2
Tips 20									
	400	102	F062004504000300	104	179	194	2.0	1.28	7.2
	500	102	F062004505000300	129	224	242	2.5	1.28	8.8
	600	102	F062004506000300	155	269	291	3.0	1.28	1.6
	700	102	F062004507000300	181	313	339	3.5	1.28	12.2
	800	102	F062004508000300	207	358	388	4.0	1.28	13.9
	900	102	F062004509000300	233	403	436	4.5	1.28	15.5
	1000	102	F062004510000300	259	448	485	5.0	1.28	17.2
	1100	102	F062004511000300	285	493	533	5.5	1.28	18.9

450

AUGSTUMS 450 mm	GARUMS	DZIĻUMS		Jauda (W) 45/35/20°C	Jauda (W) 55/45/20°C	Jauda (W) 60/45/20°C	TILPUMS (l)	N-ekponents	SVARS (kg)
	1200	102	F062004512000300	311	537	582	6.0	1.28	2.6
	1400	102	F062004514000300	362	627	679	7.0	1.28	23.9
	1600	102	F062004516000300	414	716	775	8.0	1.28	27.3
	1800	102	F062004518000300	466	806	872	9.0	1.28	3.6
	2000	102	F062004520000300	518	895	969	10.0	1.28	34.0
	2300	102	F062004523000300	595	1030	1115	11.5	1.28	39.0
	2600	102	F062004526000300	673	1164	1260	13.0	1.28	44.2
	3000	102	F062004530000300	776	1343	1454	15.0	1.28	5.7
Tips 30									
	400	152	F063004504000300	142	248	269	3.0	1.30	10.1
	500	152	F063004505000300	178	310	336	3.8	1.30	12.4
	600	152	F063004506000300	213	372	403	4.5	1.30	14.9
	700	152	F063004507000300	249	434	470	5.3	1.30	17.4
	800	152	F063004508000300	284	496	537	6.0	1.30	19.9
	900	152	F063004509000300	320	557	604	6.8	1.30	22.4
	1000	152	F063004510000300	355	619	671	7.5	1.30	24.9
	1100	152	F063004511000300	391	681	738	8.3	1.30	27.4
	1200	152	F063004512000300	426	743	806	9.0	1.30	29.9
	1400	152	F063004514000300	497	867	940	10.5	1.30	34.9
	1600	152	F063004516000300	568	991	1074	12.0	1.30	39.9
	1800	152	F063004518000300	639	1115	1208	13.5	1.30	44.9
	2000	152	F063004520000300	711	1239	1343	15.0	1.30	49.9
	2300	152	F063004523000300	817	1425	1544	17.3	1.30	57.4
	2600	152	F063004526000300	924	1610	1745	19.5	1.30	64.9
	3000	152	F063004530000300	1066	1858	2014	22.5	1.30	74.9

500

AUGSTUMS 500 mm	GARUMS	DZIĻUMS		Jauda (W) 45/35/20°C	Jauda (W) 55/45/20°C	Jauda (W) 60/45/20°C	TILPUMS (l)	N-ekponents	SVARS (kg)
Tips 10									
	400	47	F061005004001300	64	112	121	1.1	1.31	3.8
	500	47	F061005005001300	80	140	152	1.4	1.31	4.8
	600	47	F061005006001300	96	168	182	1.6	1.31	5.7
	700	47	F061005007001300	112	196	212	1.9	1.31	6.7
	800	47	F061005008001300	128	224	243	2.2	1.31	7.6
	900	47	F061005009001300	144	252	273	2.4	1.31	8.6
	1000	47	F061005010001300	160	280	303	2.7	1.31	9.5
	1100	47	F061005011001300	176	308	334	3.0	1.31	10.4
	1200	47	F061005012001300	192	336	364	3.2	1.31	11.3
	1400	47	F061005014001300	224	392	425	3.8	1.31	13.1
	1600	47	F061005016001300	256	448	486	4.3	1.31	14.9
	1800	47	F061005018001300	288	504	546	4.9	1.31	16.7
	2000	47	F061005020001300	320	560	607	5.4	1.31	19.0
	2300	47	F061005023001300	368	644	698	6.2	1.31	21.1
	2600	47	F061005026001300	416	728	789	7.0	1.31	23.8
	3000	47	F061005030001300	480	839	910	8.1	1.31	27.4
Tips 20									
	400	102	F062005004000300	112	195	211	2.2	1.29	7.4
	500	102	F062005005000300	140	243	263	2.8	1.29	9.3
	600	102	F062005006000300	169	292	316	3.3	1.29	1.8
	700	102	F062005007000300	197	340	369	3.9	1.29	12.5
	800	102	F062005008000300	225	389	421	4.4	1.29	14.2
	900	102	F062005009000300	253	438	474	5.0	1.29	15.9
	1000	102	F062005010000300	281	486	527	5.5	1.29	17.6
	1100	102	F062005011000300	309	535	579	6.0	1.29	19.4

500

AUGSTUMS 500 mm	GARUMS	DZIĻUMS		Jauda (W) 45/35/20°C	Jauda (W) 55/45/20°C	Jauda (W) 60/45/20°C	TILPUMS (l)	N-ekponents	SVARS (kg)
	1200	102	F062005012000300	337	584	632	6.6	1.29	21.5
	1400	102	F062005014000300	393	681	737	7.7	1.29	24.5
	1600	102	F062005016000300	450	778	843	8.8	1.29	27.9
	1800	102	F062005018000300	506	876	948	9.9	1.29	31.4
	2000	102	F062005020000300	562	973	1053	11.0	1.29	34.7
	2300	102	F062005023000300	646	1119	1211	12.7	1.29	39.8
	2600	102	F062005026000300	731	1265	1369	14.3	1.29	45.0
	3000	102	F062005030000300	843	1459	1580	16.5	1.29	51.8
Tips 30									
	400	152	F063005004000300	154	269	292	3.3	1.31	10.0
	500	152	F063005005000300	193	336	365	4.1	1.31	12.4
	600	152	F063005006000300	231	403	437	4.9	1.31	15.0
	700	152	F063005007000300	269	470	510	5.7	1.31	17.5
	800	152	F063005008000300	308	538	583	6.6	1.31	2.8
	900	152	F063005009000300	346	605	656	7.4	1.31	22.6
	1000	152	F063005010000300	385	672	729	8.2	1.31	25.2
	1100	152	F063005011000300	424	739	801	9.0	1.31	27.8
	1200	152	F063005012000300	462	806	874	9.8	1.31	3.3
	1400	152	F063005014000300	539	941	1020	11.5	1.31	35.5
	1600	152	F063005016000300	616	1075	1165	13.1	1.31	4.6
	1800	152	F063005018000300	693	1210	1311	14.8	1.31	45.8
	2000	152	F063005020000300	770	1344	1457	16.4	1.31	5.9
	2300	152	F063005023000300	886	1546	1675	18.9	1.31	58.5
	2600	152	F063005026000300	1001	1747	1894	21.3	1.31	66.2
	3000	152	F063005030000300	1155	2016	2185	24.6	1.31	76.5

550

AUGSTUMS 550 mm	GARUMS	DZIĻUMS		Jauda (W) 45/35/20°C	Jauda (W) 55/45/20°C	Jauda (W) 60/45/20°C	TILPUMS (l)	N-ekponents	SVARS (kg)
Tips 10									
	400	47	F061005504001300	70	122	132	1.2	1.30	4.3
	500	47	F061005505001300	88	153	165	1.5	1.30	5.3
	600	47	F061005506001300	105	183	198	1.8	1.30	6.4
	700	47	F061005507001300	123	214	232	2.1	1.30	7.5
	800	47	F061005508001300	140	244	265	2.4	1.30	8.6
	900	47	F061005509001300	158	275	298	2.7	1.30	9.6
	1000	47	F061005510001300	175	305	331	3.0	1.30	10.7
	1100	47	F061005511001300	193	336	364	3.3	1.30	11.6
	1200	47	F061005512001300	210	366	397	3.6	1.30	12.6
	1400	47	F061005514001300	245	427	463	4.2	1.30	14.6
	1600	47	F061005516001300	280	488	529	4.8	1.30	16.5
	1800	47	F061005518001300	315	549	595	5.4	1.30	18.5
	2000	47	F061005520001300	351	610	661	6.0	1.30	20.4
	2300	47	F061005523001300	403	702	761	6.9	1.30	23.3
	2600	47	F061005526001300	456	794	860	7.8	1.30	26.2
	3000	47	F061005530001300	526	916	992	9.0	1.30	28.5
Tips 20									
	400	102	F062005504000300	121	210	227	2.4	1.29	8.2
	500	102	F062005505000300	151	262	284	3.0	1.29	1.4
	600	102	F062005506000300	182	315	341	3.7	1.29	12.3
	700	102	F062005507000300	212	367	397	4.3	1.29	14.3
	800	102	F062005508000300	242	420	454	4.9	1.29	16.4
	900	102	F062005509000300	273	472	511	5.5	1.29	18.4
	1000	102	F062005510000300	303	525	568	6.1	1.29	2.6
	1100	102	F062005511000300	333	577	625	6.7	1.29	22.5

550

AUGSTUMS 550 mm	GARUMS	DZIĻUMS		Jauda (W) 45/35/20°C	Jauda (W) 55/45/20°C	Jauda (W) 60/45/20°C	TILPUMS (l)	N-ekponents	SVARS (kg)
	1200	102	F062005512000300	364	629	681	7.3	1.29	24.5
	1400	102	F062005514000300	424	734	795	8.5	1.29	28.6
	1600	102	F062005516000300	485	839	909	9.8	1.29	32.6
	1800	102	F062005518000300	545	944	1022	11.0	1.29	36.7
	2000	102	F062005520000300	606	1049	1136	12.2	1.29	4.7
	2300	102	F062005523000300	697	1206	1306	14.0	1.29	46.7
	2600	102	F062005526000300	788	1364	1476	15.9	1.29	52.8
	3000	102	F062005530000300	909	1574	1704	18.3	1.29	6.9
Tips 30									
	400	152	F063005504000300	166	289	314	3.6	1.31	1.7
	500	152	F063005505000300	207	362	392	4.5	1.31	13.7
	600	152	F063005506000300	248	434	470	5.4	1.31	16.5
	700	152	F063005507000300	290	506	549	6.3	1.31	19.5
	800	152	F063005508000300	331	578	627	7.2	1.31	22.4
	900	152	F063005509000300	372	651	705	8.1	1.31	25.3
	1000	152	F063005510000300	414	723	784	9.0	1.31	28.3
	1100	152	F063005511000300	455	795	862	9.9	1.31	31.2
	1200	152	F063005512000300	497	868	941	10.8	1.31	34.1
	1400	152	F063005514000300	579	1012	1097	12.6	1.31	40.0
	1600	152	F063005516000300	662	1157	1254	14.4	1.31	45.8
	1800	152	F063005518000300	745	1301	1411	16.2	1.31	51.7
	2000	152	F063005520000300	828	1446	1568	18.0	1.31	57.6
	2300	152	F063005523000300	952	1663	1803	20.7	1.31	66.3
	2600	152	F063005526000300	1076	1880	2038	23.4	1.31	75.1
	3000	152	F063005530000300	1242	2169	2351	27.0	1.31	86.9

600

AUGSTUMS 600 mm	GARUMS	DZIĻUMS		Jauda (W) 45/35/20°C	Jauda (W) 55/45/20°C	Jauda (W) 60/45/20°C	TILPUMS (l)	N-ekponents	SVARS (kg)
Tips 10									
	400	47	F061006004001300	76	132	143	1.3	1.29	4.6
	500	47	F061006005001300	95	165	179	1.6	1.29	5.8
	600	47	F061006006001300	114	198	214	1.9	1.29	7.0
	700	47	F061006007001300	133	231	250	2.2	1.29	8.1
	800	47	F061006008001300	152	264	286	2.6	1.29	9.3
	900	47	F061006009001300	171	297	322	2.9	1.29	10.4
	1000	47	F061006010001300	190	330	358	3.2	1.29	11.6
	1100	47	F061006011001300	209	363	394	3.5	1.29	12.6
	1200	47	F061006012001300	228	396	429	3.8	1.29	13.7
	1400	47	F061006014001300	267	462	501	4.5	1.29	15.8
	1600	47	F061006016001300	304	529	572	5.1	1.29	17.9
	1800	47	F061006018001300	343	595	644	5.8	1.29	20.0
	2000	47	F061006020001300	381	661	716	6.4	1.29	22.1
	2300	47	F061006023001300	438	760	823	7.4	1.29	25.3
	2600	47	F061006026001300	495	859	930	8.3	1.29	28.5
	3000	47	F061006030001300	571	991	1073	9.6	1.29	32.7
Tips 20									
	400	102	F062006004000300	130	225	243	2.6	1.29	9.2
	500	102	F062006005000300	162	281	305	3.3	1.29	11.3
	600	102	F062006006000300	195	337	365	4.0	1.29	13.4
	700	102	F062006007000300	227	393	426	4.6	1.29	15.5
	800	102	F062006008000300	260	450	487	5.3	1.29	17.6
	900	102	F062006009000300	292	506	548	5.9	1.29	19.7
	1000	102	F062006010000300	324	562	609	6.6	1.29	21.8
	1100	102	F062006011000300	357	618	670	7.3	1.29	23.9

600

AUGSTUMS 600 mm	GARUMS	DZIĻUMS		Jauda (W) 45/35/20°C	Jauda (W) 55/45/20°C	Jauda (W) 60/45/20°C	TILPUMS (l)	N-ekponents	SVARS (kg)
	1200	102	F062006012000300	389	674	730	7.9	1.29	26.3
	1400	102	F062006014000300	454	787	852	9.2	1.29	3.2
	1600	102	F062006016000300	519	899	974	10.6	1.29	34.4
	1800	102	F062006018000300	584	1012	1096	11.9	1.29	38.6
	2000	102	F062006020000300	649	1124	1217	13.2	1.29	42.8
	2300	102	F062006023000300	746	1293	1400	15.2	1.29	49.9
	2600	102	F062006026000300	843	1461	1583	17.2	1.29	55.4
	3000	102	F062006030000300	973	1686	1826	19.8	1.29	63.8
Tips 30									
	400	152	F063006004000300	177	309	335	3.9	1.31	12.3
	500	152	F063006005000300	221	387	419	4.9	1.31	15.2
	600	152	F063006006000300	265	464	503	5.9	1.31	18.4
	700	152	F063006007000300	310	541	587	6.9	1.31	21.6
	800	152	F063006008000300	354	619	671	7.8	1.31	24.6
	900	152	F063006009000300	398	696	755	8.8	1.31	27.8
	1000	152	F063006010000300	442	773	839	9.8	1.31	3.9
	1100	152	F063006011000300	486	851	923	10.8	1.31	34.7
	1200	152	F063006012000300	531	928	1006	11.8	1.31	37.2
	1400	152	F063006014000300	619	1083	1174	13.7	1.31	43.5
	1600	152	F063006016000300	707	1237	1342	15.7	1.31	49.8
	1800	152	F063006018000300	796	1392	1510	17.6	1.31	56.6
	2000	152	F063006020000300	884	1547	1677	19.6	1.31	62.3
	2300	152	F063006023000300	1017	1779	1929	22.5	1.31	71.8
	2600	152	F063006026000300	1150	2011	2180	25.5	1.31	81.2
	3000	152	F063006030000300	1327	2320	2516	29.4	1.31	93.7

900

AUGSTUMS 900 mm	GARUMS	DZIĻUMS		Jauda (W) 45/35/20°C	Jauda (W) 55/45/20°C	Jauda (W) 60/45/20°C	TILPUMS (l)	N-ekponents	SVARS (kg)
Tips 10									
	400	47	F061009004001300	107	186	201	1.8	1.30	6.8
	500	47	F061009005001300	134	233	252	2.3	1.30	8.4
	600	47	F061009006001300	160	279	303	2.7	1.30	10.1
	700	47	F061009007001300	187	326	353	3.1	1.30	11.8
	800	47	F061009008001300	214	372	403	3.6	1.30	13.5
	900	47	F061009009001300	241	419	454	4.0	1.30	15.2
	1000	47	F061009010001300	267	465	504	4.5	1.30	16.9
	1100	47	F061009011001300	294	512	554	5.0	1.30	18.4
	1200	47	F061009012001300	321	558	605	5.4	1.30	20.0
	1400	47	F061009014001300	374	651	706	6.3	1.30	23.1
	1600	47	F061009016001300	428	744	807	7.2	1.30	26.3
	1800	47	F061009018001300	481	837	907	8.1	1.30	29.4
	2000	47	F061009020001300	534	930	1008	9.0	1.30	32.6
	2300	47	F061009023001300	614	1070	1159	10.3	1.30	37.3
	2600	47	F061009026001300	695	1209	1311	11.7	1.30	42.0
	3000	47	F061009030001300	801	1395	1512	13.5	1.30	48.3
Tips 20									
	400	102	F062009004000300	179	311	338	3.6	1.30	12.4
	500	102	F062009005000300	223	389	422	4.5	1.30	15.5
	600	102	F062009006000300	268	467	506	5.4	1.30	18.6
	700	102	F062009007000300	312	545	591	6.3	1.30	21.7
	800	102	F062009008000300	357	623	675	7.2	1.30	24.8
	900	102	F062009009000300	402	701	760	8.1	1.30	28.0
	1000	102	F062009010000300	446	779	844	9.0	1.30	31.7
	1100	102	F062009011000300	491	857	928	9.9	1.30	34.2

900

AUGSTUMS 900 mm	GARUMS	DZIĻUMS		Jauda (W) 45/35/20°C	Jauda (W) 55/45/20°C	Jauda (W) 60/45/20°C	TILPUMS (l)	N-ekponents	SVARS (kg)
	1200	102	F062009012000300	536	934	1013	10.8	1.30	37.3
	1400	102	F062009014000300	625	1090	1182	12.6	1.30	43.5
	1600	102	F062009016000300	714	1246	1350	14.4	1.30	49.8
	1800	102	F062009018000300	803	1402	1519	16.2	1.30	55.9
	2000	102	F062009020000300	893	1557	1688	18.0	1.30	62.1
	2300	102	F062009023000300	1027	1791	1941	20.7	1.30	71.4
	2600	102	F062009026000300	1161	2025	2194	23.4	1.30	8.8
	3000	102	F062009030000300	1339	2336	2532	27.0	1.30	93.2
Tips 30									
	400	152	F063009004000300	235	417	453	5.3	1.34	16.3
	500	152	F063009005000300	294	521	566	6.7	1.34	2.9
	600	152	F063009006000300	353	626	680	8.0	1.34	25.5
	700	152	F063009007000300	412	730	793	9.3	1.34	3.2
	800	152	F063009008000300	470	834	906	10.6	1.34	34.8
	900	152	F063009009000300	529	938	1019	12.0	1.34	39.5
	1000	152	F063009010000300	588	1043	1133	13.3	1.34	44.5
	1100	152	F063009011000300	647	1147	1246	14.6	1.34	48.7
	1200	152	F063009012000300	706	1251	1359	16.0	1.34	53.4
	1400	152	F063009014000300	823	1460	1586	18.6	1.34	62.5
	1600	152	F063009016000300	941	1668	1812	21.3	1.34	71.8
	1800	152	F063009018000300	1059	1877	2039	23.9	1.34	81.7
	2000	152	F063009020000300	1176	2085	2265	26.6	1.34	9.3
	2300	152	F063009023000300	1353	2398	2605	30.6	1.34	106.2
	2600	152	F063009026000300	1529	2711	2945	34.6	1.34	118.8
	3000	152	F063009030000300	1764	3128	3398	39.9	1.34	136.6