Compact ©

Augstas kvalitātes klasiskā tipa panelis radiators ar sānu pieslēgumu.

Datu lapa
2026-11-14

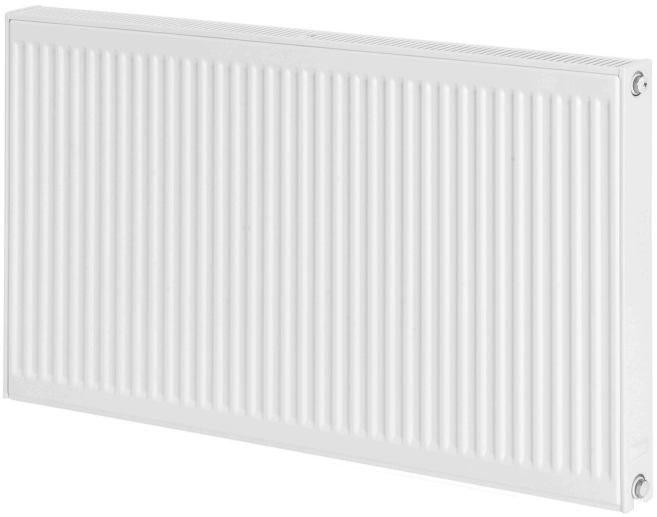

- Augsta spiediena izturība
- Estētisks dizains
- Elastīga uzstādīšana
- Vienmērīga siltuma sadale
- Plata krāsu izvēle

Compact ir klasiskā tipa paneļu radiators ar universālu dizainu un plašu izmēru klāstu; aprīkots ar sānu paneļiem, augšējo resti, bērnu drošības stiprinājumiem un pieejams RAL 9016 vai citos toņos.

Pielietojuma joma
Piemērots dzīvojamām un komerciālām ēkām ar darba spiediena prasībām līdz 10 bar. Ideāls daudzstāvu ēkām un lielām instalācijām. Maksimālā darba temperatūra 110°C, 33,3 mm vertikālie kanāli.

Dimensiju noteikšana
Lai nodrošinātu pareizu produktu izvēli, lūdzu, izmantojiet mūsu kalkulatoru rīkus un produktu bukletus. Ja nepieciešama palīdzība, sazinieties ar mūsu pārdošanas komandu.

Lietošana

Uzstādi radiatoru, izmantojot MCW-7 sienas kronšteinus stabilitātei, pievieno sistēmai caur četriem sānu G 1/2 collu pieslēgumiem, veic regulāru apkopi un ievēro maksimālo darba spiedienu 10 bar un temperatūru līdz 110 grādiem.

AMA teksts
Compact radiators paredzēts augstspiediena apkures sistēmām ar darba spiedienu līdz 10 bar un temperatūru līdz 110°C. Izgatavots no PN-EN 10130 sertificēta auksti velmēta tērauda. Konstrukcijā iekļauti vertikāli ūdens kanāli 33,3 mm solī, sānu paneļi un augšējā reste. Pieslēgumi: 4×G 1/2". Piegādes komplektā sienas stiprinājumi, aizbāžņi un atgaisošanas vārsts. Standarta krāsa RAL 9016, citi toņi pēc pasūtījuma. Ražotājam jābūt reģistrētam NATO kodifikācijas sistēmā.

Specifikācijas

ĪPAŠĪBAS	VIENĪBA	VĒRTĪBAS
ETIM klase		EC011022
Materiāls		Tērauds
Tips		11, 21, 22, 33
Virsmas struktūra		Profilēts
Maks. darba spiediens	bar	10
Standarta pieslēgumu skaits		4
Siltuma atdeve pēc EN 442 atzītas laboratorijas		Jā
Maksimālā darbības temperatūra	°C	110
Standarta krāsa		Jā
Krāsa		Balts
RAL numurs		9016
Restes/Vāka plāksne		Jā
Restes/Vāka plāksne		Jā
Spīduma vērtība		Spīdīgs
Vītnes izmērs (collas)		1/2 inch
Pieslēguma vītne		Iekšējā vītne
Ar vienpunkta pieslēgumu		Jā
Ar ventilācijas pieslēgumu		Jā
Ar ventilācijas vārstu/gaisa atgaisotāju		Jā
Ar iztukšošanas iespēju		Jā

Resursi



ProductImage - Purmo Compact, C, product image 30 degrees.

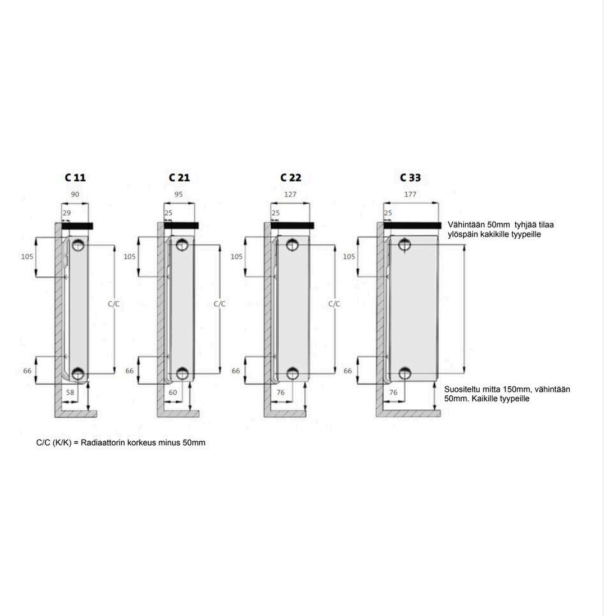

DimensionalDrawing - Radiatora stiprināšanas instrukcija

COMPACT (mm)				
	C11		C21s, C22, C33	
A	a1	a2	a1	a2
400-1600	117	-	133	-
1800	117	917	133	900
2000	117	1017	133	1000
2300	117	1150	133	1167
2600	117	1317	133	1300
3000	117	1517	133	1500

DimensionalDrawing - Compact, tabulas rasējums A



DimensionalDrawing - Compact, tips 33, skats no augšas

Resursi

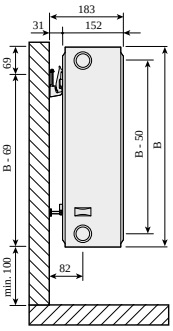

DimensionalDrawing - Compact, tips 33, skats no sāniem ar SSMS sienas kronšteiniem

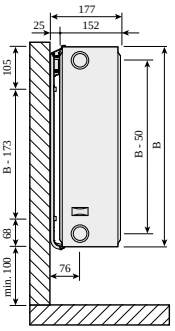

DimensionalDrawing - Compact, tips 33, skats no sāniem ar Monclac sienas kronšteiniem



DimensionalDrawing - Compact, tips 22, skats no augšas

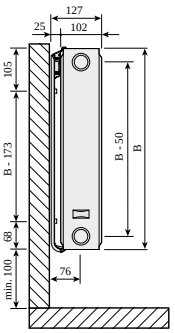

DimensionalDrawing - Compact, tips 22, skats no sāniem ar Monclac sienas kronšteiniem

Resursi

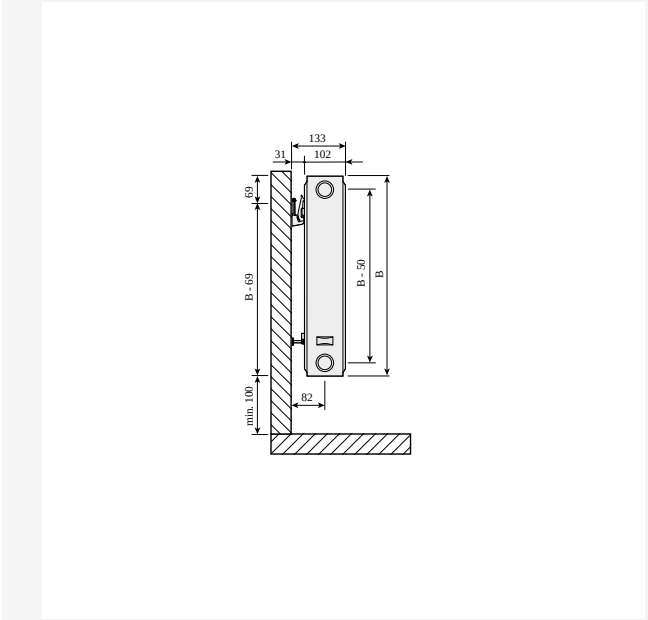

DimensionalDrawing - Compact, tips 22, skats no sāniem ar SSMS sienas kronšteiniem

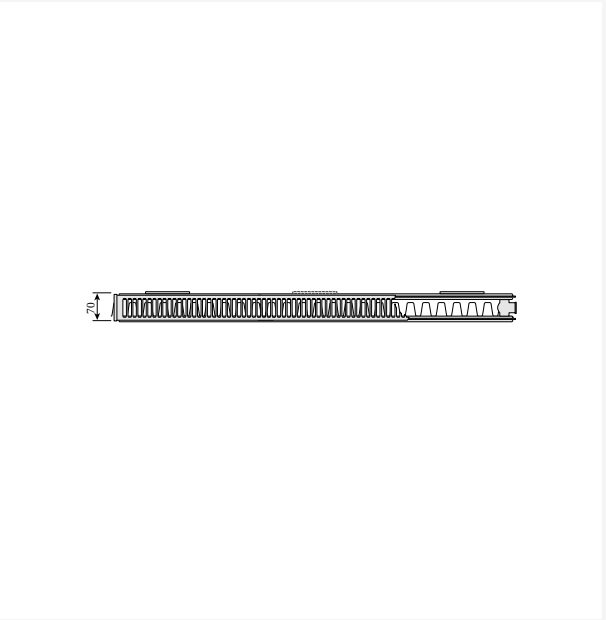

DimensionalDrawing - Compact, tips 21, skats no augšas

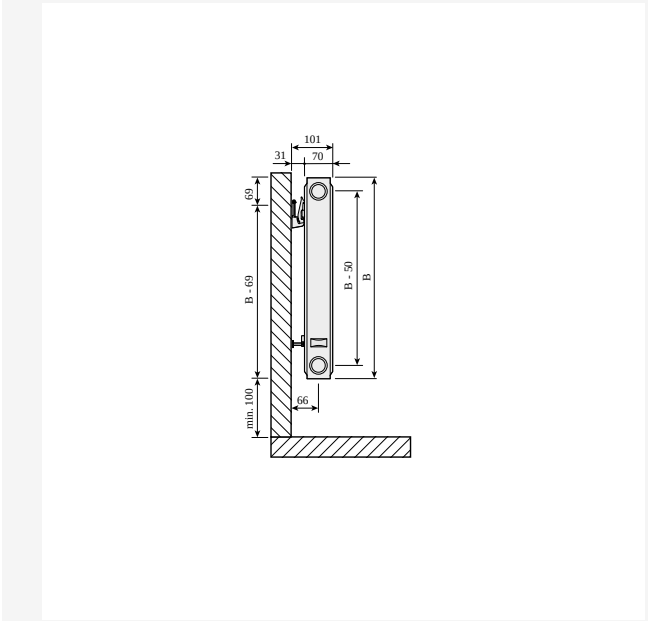

DimensionalDrawing - Compact, tips 21, skats no sāniem ar SSMS sienas kronšteiniem

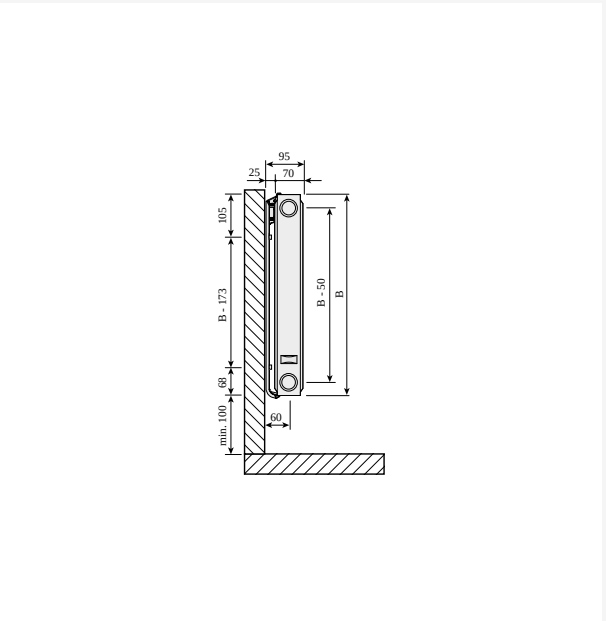

DimensionalDrawing - Compact, tips 21, skats no sāniem ar Monclac sienas kronšteiniem

Resursi

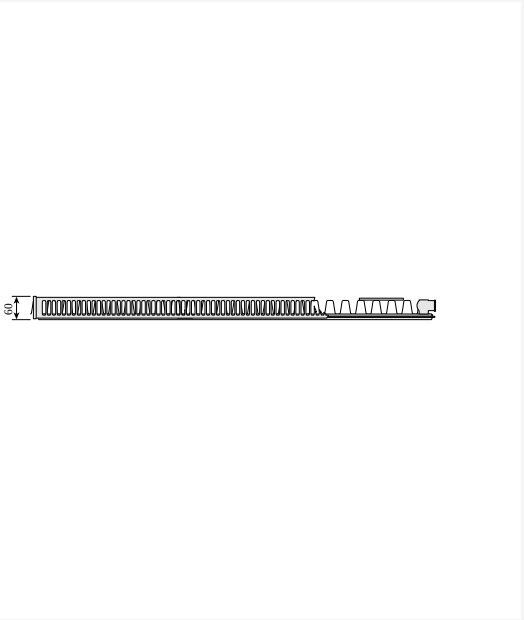

DimensionalDrawing - Compact, tips 11, skats no augšas

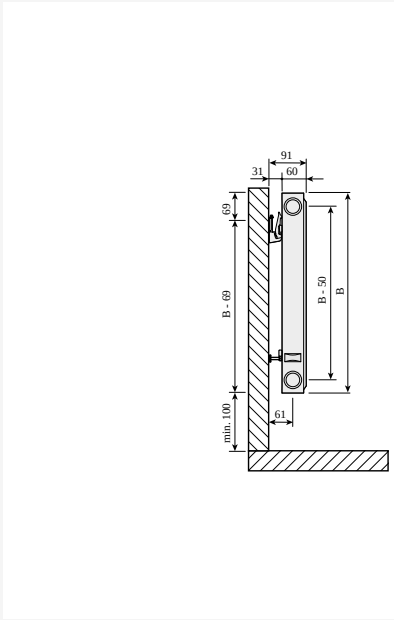

DimensionalDrawing - Compact, tips 11, skats no sāniem ar SSMS sienas kronšteiniem

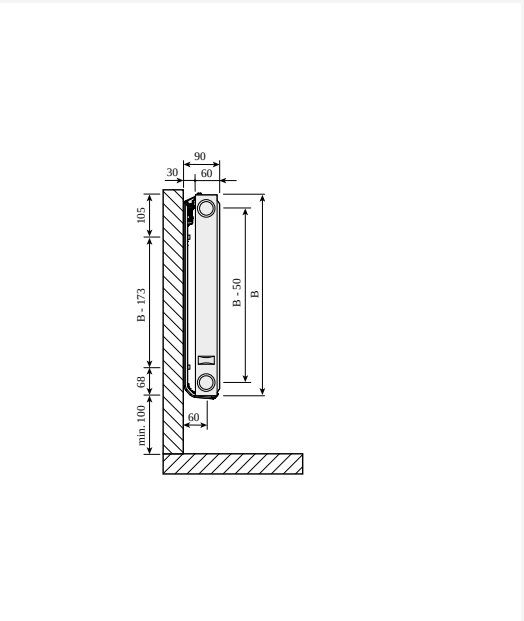

DimensionalDrawing - Compact, tips 11, skats no sāniem ar Monclac sienas kronšteiniem

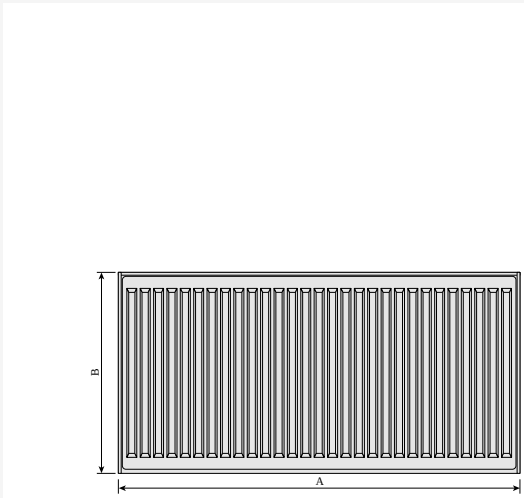

DimensionalDrawing - Compact, skats no priekšpuses

Resursi

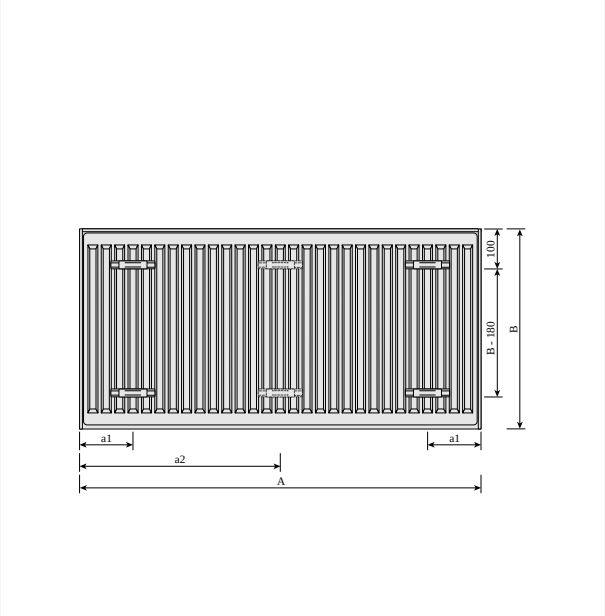

DimensionalDrawing - Compact, skats no aizmugures

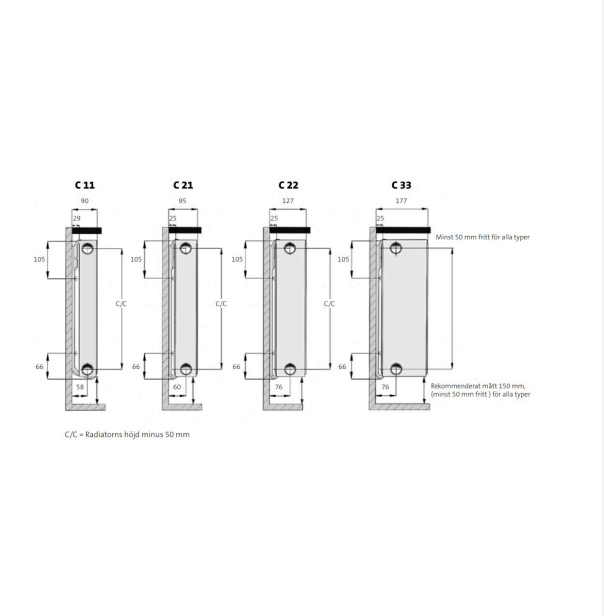

DimensionalDrawing - Uzstādīšanas izmēri

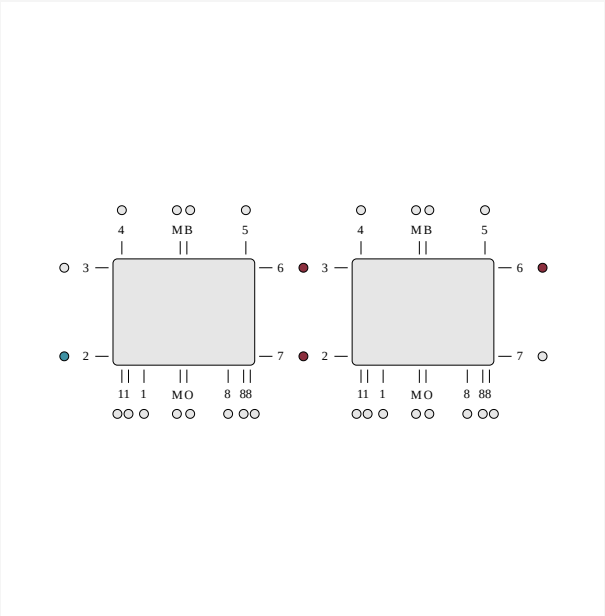

DimensionalDrawing - ETIM 62 sērijveida horizontālais pieslēgums

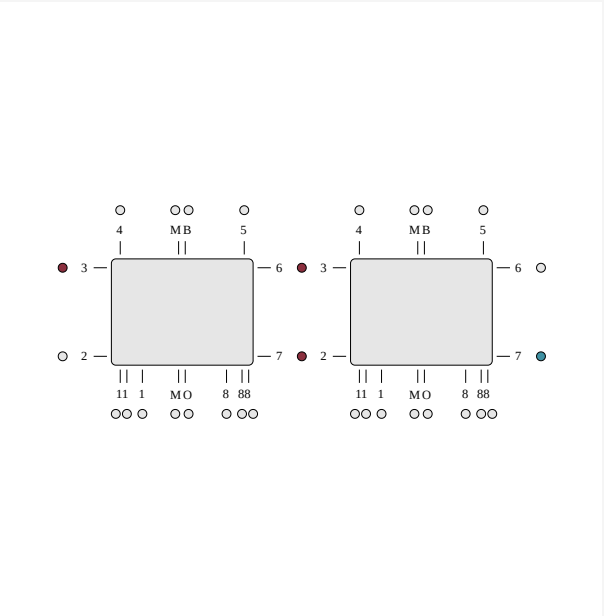

DimensionalDrawing - ETIM 37 sērijveida horizontālais pieslēgums

Resursi

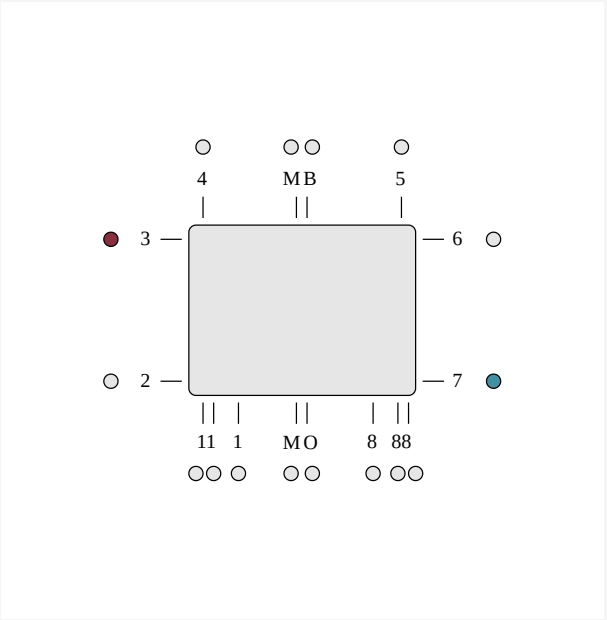

DimensionalDrawing - Diagonāls pieslēgums ETIM 37. Diagonālam pieslēgumam nepieciešams ārējs vārsts. Diagonāla pieslēguma gadījumā apakšējie pieslēgumi ir noslēgti.

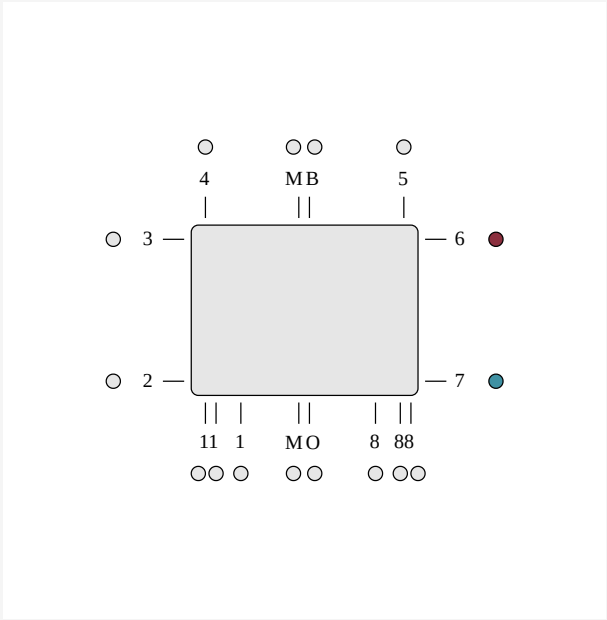

DimensionalDrawing - Sānu pieslēgums ETIM 67. Sānu pieslēgumam nepieciešams ārējs radiatora savienojums vai vārsts. Sānu pieslēguma gadījumā apakšējie pieslēgumi ir noslēgti.

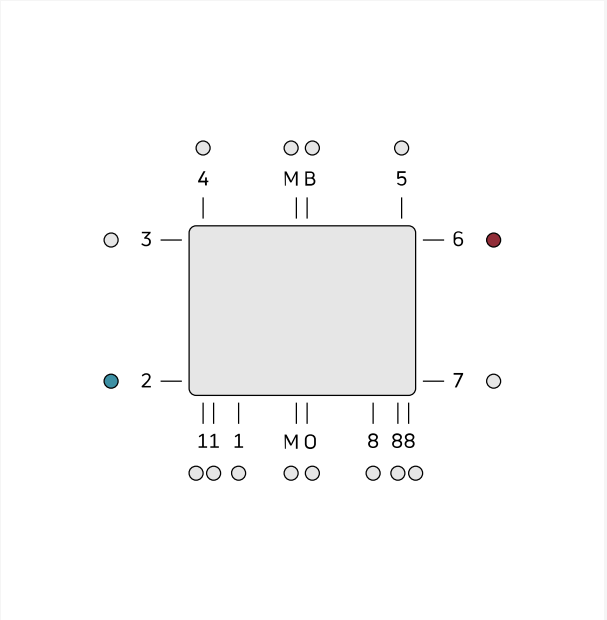

DimensionalDrawing - Diagonāls pieslēgums ETIM 62. Diagonālam pieslēgumam nepieciešams ārējs vārsts. Diagonāla pieslēguma gadījumā apakšējie pieslēgumi ir noslēgti.

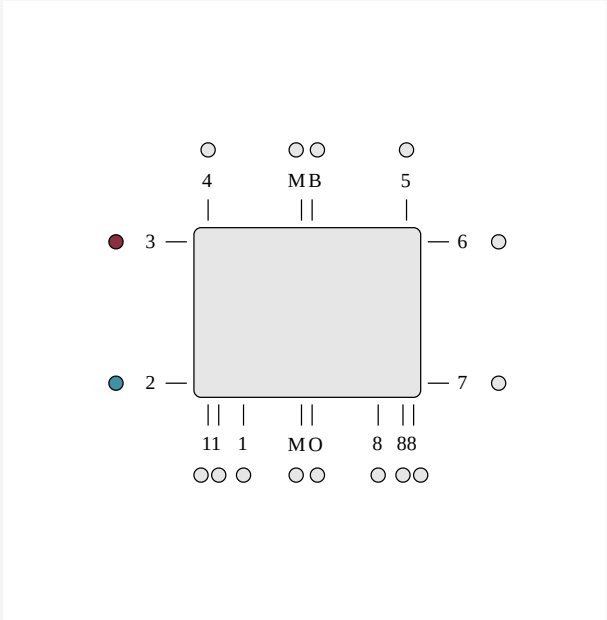

DimensionalDrawing - Sānu pieslēgums ETIM 32. Sānu pieslēgumam nepieciešams ārējs radiatora vārsts. Sānu pieslēguma gadījumā apakšējie pieslēgumi ir noslēgti.

Saistītie produkti



Sensors

Top Grill ©



Air



Gaisa ventilis un aklā aizbāžņa komplekts



Remonta krāsa

Sānu panelis ©



Sienas kronšteins Monclac



Gaisa ventilēšanas atslēga



Evosense



Atgaitas vārsts RV





300

AUGSTUMS 300 mm	GARUMS	DZIĻUMS		Jauda (W) 45/35/20°C	Jauda (W) 55/45/20°C	Jauda (W) 60/45/20°C	TILPUMS (l)	N-ekponents	SVARS (kg)
Tips 11									
	400	60	F061103004010300	65	113	122	0.7	1.30	4.4
	500	60	F061103005010300	81	141	152	0.8	1.30	5.1
	600	60	F061103006010300	97	169	183	1.0	1.30	5.9
	700	60	F061103007010300	113	197	213	1.2	1.30	6.7
	800	60	F061103008010300	129	225	244	1.4	1.30	7.5
	900	60	F061103009010300	146	253	274	1.5	1.30	8.3
	1000	60	F061103010010300	162	281	305	1.7	1.30	9.2
	1100	60	F061103011010300	178	309	335	1.9	1.30	10.0
	1200	60	F061103012010300	194	338	366	2.0	1.30	1.6
	1400	60	F061103014010300	226	394	427	2.4	1.30	12.2
	1600	60	F061103016010300	259	450	488	2.7	1.30	13.8
	1800	60	F061103018010300	291	506	549	3.1	1.30	15.4
	2000	60	F061103020010300	323	563	610	3.4	1.30	17.0
	2300	60	F061103023010300	372	647	701	3.9	1.30	19.4
	2600	60	F061103026010300	420	731	792	4.4	1.30	21.7
	3000	60	F061103030010300	485	844	914	5.1	1.30	24.9
Tips 21									
	400	70	F062103004010300	92	158	171	1.4	1.28	6.2
	500	70	F062103005010300	115	198	214	1.7	1.28	7.4
	600	70	F062103006010300	137	237	257	2.0	1.28	8.6
	700	70	F062103007010300	160	277	300	2.4	1.28	10.0
	800	70	F062103008010300	183	317	343	2.7	1.28	11.3
	900	70	F062103009010300	206	356	385	3.1	1.28	12.3
	1000	70	F062103010010300	229	396	428	3.4	1.28	13.6

300

AUGSTUMS 300 mm	GARUMS	DZIĻUMS		Jauda (W) 45/35/20°C	Jauda (W) 55/45/20°C	Jauda (W) 60/45/20°C	TILPUMS (l)	N-ekponents	SVARS (kg)
	1100	70	F062103011010300	252	435	471	3.7	1.28	14.8
	1200	70	F062103012010300	275	475	514	4.1	1.28	16.4
	1400	70	F062103014010300	321	554	600	4.8	1.28	18.7
	1600	70	F062103016010300	367	633	685	5.4	1.28	21.1
	1800	70	F062103018010300	412	712	771	6.1	1.28	23.6
	2000	70	F062103020010300	458	791	856	6.8	1.28	26.1
	2300	70	F062103023010300	527	910	985	7.8	1.28	30.0
	2600	70	F062103026010300	596	1029	1113	8.8	1.28	33.7
	3000	70	F062103030010300	687	1187	1285	10.2	1.28	38.7
Tips 22									
	400	102	F062203004010300	113	197	213	1.4	1.31	7.2
	500	102	F062203005010300	141	246	267	1.7	1.31	8.5
	600	102	F062203006010300	169	295	320	2.0	1.31	10.1
	700	102	F062203007010300	197	345	374	2.4	1.31	11.4
	800	102	F062203008010300	225	394	427	2.7	1.31	12.8
	900	102	F062203009010300	253	443	480	3.1	1.31	14.2
	1000	102	F062203010010300	282	492	534	3.4	1.31	15.6
	1100	102	F062203011010300	310	542	587	3.7	1.31	17.4
	1200	102	F062203012010300	338	591	640	4.1	1.31	18.5
	1400	102	F062203014010300	394	689	747	4.8	1.31	21.3
	1600	102	F062203016010300	451	788	854	5.4	1.31	24.2
	1800	102	F062203018010300	507	886	961	6.1	1.31	27.1
	2000	102	F062203020010300	563	985	1067	6.8	1.31	29.9
	2300	102	F062203023010300	648	1132	1228	7.8	1.31	34.1
	2600	102	F062203026010300	732	1280	1388	8.8	1.31	38.5
	3000	102	F062203030010300	845	1477	1601	10.2	1.31	44.9

300

AUGSTUMS 300 mm	GARUMS	DZIĻUMS		Jauda (W) 45/35/20°C	Jauda (W) 55/45/20°C	Jauda (W) 60/45/20°C	TILPUMS (l)	N-ekponents	SVARS (kg)
Tips 33									
	400	152	F063303004010300	157	275	299	2.0	1.31	1.3
	500	152	F063303005010300	196	344	373	2.5	1.31	12.4
	600	152	F063303006010300	236	413	448	3.1	1.31	14.5
	700	152	F063303007010300	275	482	523	3.6	1.31	16.7
	800	152	F063303008010300	314	551	597	4.1	1.31	18.8
	900	152	F063303009010300	354	620	672	4.6	1.31	2.9
	1000	152	F063303010010300	393	688	747	5.1	1.31	23.5
	1100	152	F063303011010300	432	757	821	5.6	1.31	25.2
	1200	152	F063303012010300	472	826	896	6.1	1.31	27.3
	1400	152	F063303014010300	550	964	1045	7.1	1.31	31.6
	1600	152	F063303016010300	629	1101	1195	8.2	1.31	35.8
	1800	152	F063303018010300	707	1239	1344	9.2	1.31	4.7
	2000	152	F063303020010300	786	1377	1493	10.2	1.31	44.3
	2300	152	F063303023010300	904	1583	1717	11.7	1.31	5.7
	2600	152	F063303026010300	1022	1790	1941	13.3	1.31	57.9
	3000	152	F063303030010300	1179	2065	2240	15.3	1.31	65.6

400

AUGSTUMS 400 mm	GARUMS	DZIĻUMS		Jauda (W) 45/35/20°C	Jauda (W) 55/45/20°C	Jauda (W) 60/45/20°C	TILPUMS (l)	N-ekponents	SVARS (kg)
Tips 11									
	400	60	F061104004010300	84	146	158	0.9	1.30	5.5
	500	60	F061104005010300	105	183	198	1.1	1.30	6.5
	600	60	F061104006010300	126	219	238	1.3	1.30	7.6
	700	60	F061104007010300	147	256	277	1.5	1.30	8.7
	800	60	F061104008010300	168	292	317	1.8	1.30	9.7
	900	60	F061104009010300	189	329	356	2.0	1.30	1.8
	1000	60	F061104010010300	210	366	396	2.2	1.30	11.8
	1100	60	F061104011010300	231	402	436	2.4	1.30	12.9
	1200	60	F061104012010300	252	439	475	2.6	1.30	14.0
	1400	60	F061104014010300	294	512	555	3.1	1.30	16.1
	1600	60	F061104016010300	335	585	634	3.5	1.30	18.2
	1800	60	F061104018010300	377	658	713	4.0	1.30	2.4
	2000	60	F061104020010300	419	731	792	4.4	1.30	22.5
	2300	60	F061104023010300	482	841	911	5.1	1.30	25.7
	2600	60	F061104026010300	545	950	1030	5.7	1.30	28.9
	3000	60	F061104030010300	629	1097	1188	6.6	1.30	33.2
Tips 21									
	400	70	F062104004010300	115	199	215	1.8	1.29	7.7
	500	70	F062104005010300	143	249	269	2.3	1.29	9.4
	600	70	F062104006010300	172	298	323	2.7	1.29	11.1
	700	70	F062104007010300	200	348	377	3.1	1.29	12.8
	800	70	F062104008010300	229	398	431	3.6	1.29	14.5
	900	70	F062104009010300	258	448	485	4.0	1.29	16.2
	1000	70	F062104010010300	286	497	539	4.5	1.29	17.9
	1100	70	F062104011010300	315	547	592	5.0	1.29	19.6

400

AUGSTUMS 400 mm	GARUMS	DZIĻUMS		Jauda (W) 45/35/20°C	Jauda (W) 55/45/20°C	Jauda (W) 60/45/20°C	TILPUMS (l)	N-ekponents	SVARS (kg)
	1200	70	F062104012010300	344	597	646	5.4	1.29	21.3
	1400	70	F062104014010300	401	696	754	6.3	1.29	24.6
	1600	70	F062104016010300	458	796	862	7.2	1.29	28.3
	1800	70	F062104018010300	515	895	969	8.1	1.29	31.4
	2000	70	F062104020010300	573	994	1077	9.0	1.29	34.8
	2300	70	F062104023010300	658	1144	1239	10.3	1.29	39.9
	2600	70	F062104026010300	744	1293	1400	11.7	1.29	44.9
	3000	70	F062104030010300	859	1492	1616	13.5	1.29	51.7
Tips 22									
	400	102	F062204004010300	142	249	270	1.8	1.32	9.2
	500	102	F062204005010300	177	311	338	2.3	1.32	11.3
	600	102	F062204006010300	213	374	405	2.7	1.32	13.3
	700	102	F062204007010300	248	436	473	3.1	1.32	15.0
	800	102	F062204008010300	284	498	540	3.6	1.32	16.9
	900	102	F062204009010300	319	560	608	4.0	1.32	18.8
	1000	102	F062204010010300	355	623	675	4.5	1.32	2.7
	1100	102	F062204011010300	390	685	743	5.0	1.32	22.6
	1200	102	F062204012010300	426	747	811	5.4	1.32	24.6
	1400	102	F062204014010300	497	872	946	6.3	1.32	28.4
	1600	102	F062204016010300	568	996	1081	7.2	1.32	32.3
	1800	102	F062204018010300	639	1121	1216	8.1	1.32	36.1
	2000	102	F062204020010300	710	1245	1351	9.0	1.32	40.0
	2300	102	F062204023010300	816	1432	1554	10.3	1.32	45.7
	2600	102	F062204026010300	923	1619	1756	11.7	1.32	51.6
	3000	102	F062204030010300	1064	1868	2026	13.5	1.32	59.2
Tips 33									

400

AUGSTUMS 400 mm	GARUMS	DZIĻUMS		Jauda (W) 45/35/20°C	Jauda (W) 55/45/20°C	Jauda (W) 60/45/20°C	TILPUMS (l)	N-ekponents	SVARS (kg)
	400	152	F063304004010300	196	345	375	2.7	1.33	13.5
	500	152	F063304005010300	245	432	468	3.4	1.33	16.4
	600	152	F063304006010300	294	518	562	4.0	1.33	19.2
	700	152	F063304007010300	343	604	656	4.7	1.33	22.1
	800	152	F063304008010300	392	691	749	5.4	1.33	25.0
	900	152	F063304009010300	441	777	843	6.0	1.33	27.9
	1000	152	F063304010010300	490	863	937	6.7	1.33	3.8
	1100	152	F063304011010300	539	950	1031	7.4	1.33	33.6
	1200	152	F063304012010300	588	1036	1124	8.0	1.33	36.5
	1400	152	F063304014010300	686	1209	1312	9.4	1.33	42.3
	1600	152	F063304016010300	785	1381	1499	10.7	1.33	48.5
	1800	152	F063304018010300	883	1554	1686	12.1	1.33	53.9
	2000	152	F063304020010300	981	1726	1874	13.4	1.33	59.6
	2300	152	F063304023010300	1128	1985	2155	15.4	1.33	68.2
	2600	152	F063304026010300	1275	2244	2436	17.4	1.33	76.9
	3000	152	F063304030010300	1471	2590	2811	20.1	1.33	88.4

450

AUGSTUMS 450 mm	GARUMS	DZIĻUMS		Jauda (W) 45/35/20°C	Jauda (W) 55/45/20°C	Jauda (W) 60/45/20°C	TILPUMS (l)	N-ekponents	SVARS (kg)
Tips 11									
	400	60	F061104504010300	93	162	176	1.0	1.30	6.4
	500	60	F061104505010300	116	203	220	1.3	1.30	7.6
	600	60	F061104506010300	139	243	264	1.5	1.30	8.9
	700	60	F061104507010300	163	284	308	1.8	1.30	1.2
	800	60	F061104508010300	186	325	352	2.0	1.30	11.4
	900	60	F061104509010300	209	365	396	2.3	1.30	12.7
	1000	60	F061104510010300	232	406	440	2.5	1.30	14.0
	1100	60	F061104511010300	256	446	484	2.8	1.30	15.2
	1200	60	F061104512010300	279	487	528	3.0	1.30	16.5
	1400	60	F061104514010300	325	568	616	3.5	1.30	19.4
	1600	60	F061104516010300	372	649	703	4.0	1.30	21.5
	1800	60	F061104518010300	418	730	791	4.5	1.30	24.5
	2000	60	F061104520010300	465	811	879	5.0	1.30	26.6
	2300	60	F061104523010300	535	933	1011	5.8	1.30	3.4
	2600	60	F061104526010300	604	1055	1143	6.5	1.30	34.2
	3000	60	F061104530010300	697	1217	1319	7.5	1.30	39.2
Tips 21									
	400	70	F062104504010300	125	218	236	2.0	1.30	9.3
	500	70	F062104505010300	157	273	296	2.5	1.30	11.3
	600	70	F062104506010300	188	327	355	3.0	1.30	13.4
	700	70	F062104507010300	219	382	414	3.5	1.30	15.4
	800	70	F062104508010300	250	436	473	4.0	1.30	17.4
	900	70	F062104509010300	282	491	532	4.5	1.30	19.4
	1000	70	F062104510010300	313	545	591	5.0	1.30	21.4
	1100	70	F062104511010300	344	600	650	5.5	1.30	23.5

450

AUGSTUMS 450 mm	GARUMS	DZIĻUMS		Jauda (W) 45/35/20°C	Jauda (W) 55/45/20°C	Jauda (W) 60/45/20°C	TILPUMS (l)	N-ekponents	SVARS (kg)
	1200	70	F062104512010300	376	654	709	6.0	1.30	25.5
	1400	70	F062104514010300	438	764	827	7.0	1.30	29.5
	1600	70	F062104516010300	501	873	946	8.0	1.30	33.6
	1800	70	F062104518010300	564	982	1064	9.0	1.30	37.7
	2000	70	F062104520010300	626	1091	1182	10.0	1.30	41.6
	2300	70	F062104523010300	720	1254	1359	11.5	1.30	47.7
	2600	70	F062104526010300	814	1418	1537	13.0	1.30	53.8
	3000	70	F062104530010300	939	1636	1773	15.0	1.30	61.9
Tips 22									
	400	102	F062204504010300	156	274	297	2.0	1.32	1.6
	500	102	F062204505010300	195	343	372	2.5	1.32	13.0
	600	102	F062204506010300	234	411	446	3.0	1.32	15.3
	700	102	F062204507010300	273	480	521	3.5	1.32	17.6
	800	102	F062204508010300	312	548	595	4.0	1.32	19.9
	900	102	F062204509010300	351	617	669	4.5	1.32	22.2
	1000	102	F062204510010300	390	685	744	5.0	1.32	24.5
	1100	102	F062204511010300	429	754	818	5.5	1.32	26.8
	1200	102	F062204512010300	468	822	892	6.0	1.32	29.1
	1400	102	F062204514010300	546	960	1041	7.0	1.32	33.7
	1600	102	F062204516010300	624	1097	1190	8.0	1.32	38.3
	1800	102	F062204518010300	702	1234	1339	9.0	1.32	43.0
	2000	102	F062204520010300	780	1371	1487	10.0	1.32	47.6
	2300	102	F062204523010300	897	1576	1711	11.5	1.32	54.5
	2600	102	F062204526010300	1014	1782	1934	13.0	1.32	61.4
	3000	102	F062204530010300	1169	2056	2231	15.0	1.32	7.6
Tips 33									

450

AUGSTUMS 450 mm	GARUMS	DZIĻUMS		Jauda (W) 45/35/20°C	Jauda (W) 55/45/20°C	Jauda (W) 60/45/20°C	TILPUMS (l)	N-ekponents	SVARS (kg)
	400	152	F063304504010300	215	379	411	3.0	1.33	15.8
	500	152	F063304505010300	268	473	514	3.8	1.33	19.2
	600	152	F063304506010300	322	568	617	4.5	1.33	22.7
	700	152	F063304507010300	376	663	720	5.3	1.33	26.1
	800	152	F063304508010300	429	757	822	6.0	1.33	29.6
	900	152	F063304509010300	483	852	925	6.8	1.33	33.7
	1000	152	F063304510010300	536	947	1028	7.5	1.33	36.5
	1100	152	F063304511010300	590	1041	1131	8.3	1.33	39.9
	1200	152	F063304512010300	644	1136	1233	9.0	1.33	43.3
	1400	152	F063304514010300	751	1326	1439	10.5	1.33	5.2
	1600	152	F063304516010300	858	1515	1645	12.0	1.33	57.1
	1800	152	F063304518010300	966	1704	1850	13.5	1.33	64.1
	2000	152	F063304520010300	1073	1894	2056	15.0	1.33	7.9
	2300	152	F063304523010300	1234	2178	2364	17.3	1.33	81.2
	2600	152	F063304526010300	1395	2462	2673	19.5	1.33	91.6
	3000	152	F063304530010300	1609	2840	3084	22.5	1.33	107.4

500

AUGSTUMS 500 mm	GARUMS	DZIĻUMS		Jauda (W) 45/35/20°C	Jauda (W) 55/45/20°C	Jauda (W) 60/45/20°C	TILPUMS (l)	N-ekponents	SVARS (kg)
Tips 11									
	400	60	F061105004010300	102	178	193	1.1	1.31	6.5
	500	60	F061105005010300	127	223	241	1.4	1.31	7.8
	600	60	F061105006010300	153	267	290	1.6	1.31	9.2
	700	60	F061105007010300	178	312	338	1.9	1.31	1.6
	800	60	F061105008010300	204	356	386	2.2	1.31	12.0
	900	60	F061105009010300	229	401	434	2.4	1.31	13.3
	1000	60	F061105010010300	255	445	483	2.7	1.31	14.8
	1100	60	F061105011010300	280	490	531	3.0	1.31	16.4
	1200	60	F061105012010300	306	534	579	3.2	1.31	17.5
	1400	60	F061105014010300	357	623	676	3.8	1.31	2.2
	1600	60	F061105016010300	408	712	772	4.3	1.31	22.9
	1800	60	F061105018010300	459	801	869	4.9	1.31	25.7
	2000	60	F061105020010300	510	890	965	5.4	1.31	28.4
	2300	60	F061105023010300	586	1024	1110	6.2	1.31	32.6
	2600	60	F061105026010300	663	1158	1255	7.0	1.31	36.7
	3000	60	F061105030010300	765	1336	1448	8.1	1.31	43.0
Tips 21									
	400	70	F062105004010300	136	237	257	2.2	1.31	9.6
	500	70	F062105005010300	170	296	321	2.8	1.31	11.7
	600	70	F062105006010300	204	356	386	3.3	1.31	13.8
	700	70	F062105007010300	237	415	450	3.9	1.31	15.9
	800	70	F062105008010300	271	474	514	4.4	1.31	18.1
	900	70	F062105009010300	305	533	578	5.0	1.31	2.1
	1000	70	F062105010010300	339	593	643	5.5	1.31	22.2
	1100	70	F062105011010300	373	652	707	6.0	1.31	24.3

500

AUGSTUMS 500 mm	GARUMS	DZIĻUMS		Jauda (W) 45/35/20°C	Jauda (W) 55/45/20°C	Jauda (W) 60/45/20°C	TILPUMS (l)	N-ekponents	SVARS (kg)
	1200	70	F062105012010300	407	711	771	6.6	1.31	26.4
	1400	70	F062105014010300	475	830	900	7.7	1.31	3.5
	1600	70	F062105016010300	543	948	1028	8.8	1.31	34.7
	1800	70	F062105018010300	611	1067	1157	9.9	1.31	38.9
	2000	70	F062105020010300	679	1185	1285	11.0	1.31	43.9
	2300	70	F062105023010300	780	1363	1478	12.7	1.31	49.4
	2600	70	F062105026010300	882	1541	1671	14.3	1.31	55.6
	3000	70	F062105030010300	1018	1778	1928	16.5	1.31	64.0
Tips 22									
	400	102	F062205004010300	169	299	324	2.2	1.33	11.2
	500	102	F062205005010300	212	373	405	2.8	1.33	13.7
	600	102	F062205006010300	254	448	486	3.3	1.33	16.4
	700	102	F062205007010300	297	522	567	3.9	1.33	18.6
	800	102	F062205008010300	339	597	648	4.4	1.33	2.9
	900	102	F062205009010300	381	672	729	5.0	1.33	23.4
	1000	102	F062205010010300	424	746	810	5.5	1.33	25.8
	1100	102	F062205011010300	466	821	891	6.0	1.33	28.3
	1200	102	F062205012010300	508	896	972	6.6	1.33	3.6
	1400	102	F062205014010300	593	1045	1134	7.7	1.33	35.5
	1600	102	F062205016010300	678	1194	1296	8.8	1.33	4.3
	1800	102	F062205018010300	763	1343	1458	9.9	1.33	45.2
	2000	102	F062205020010300	847	1493	1620	11.0	1.33	5.1
	2300	102	F062205023010300	974	1717	1863	12.7	1.33	57.3
	2600	102	F062205026010300	1102	1940	2106	14.3	1.33	64.6
	3000	102	F062205030010300	1271	2239	2430	16.5	1.33	74.3
Tips 33									

500

AUGSTUMS 500 mm	GARUMS	DZIĻUMS		Jauda (W) 45/35/20°C	Jauda (W) 55/45/20°C	Jauda (W) 60/45/20°C	TILPUMS (l)	N-ekponents	SVARS (kg)
	400	152	F063305004010300	232	411	447	3.3	1.34	16.6
	500	152	F063305005010300	290	514	558	4.1	1.34	2.2
	600	152	F063305006010300	349	617	670	4.9	1.34	23.9
	700	152	F063305007010300	407	719	781	5.7	1.34	27.6
	800	152	F063305008010300	465	822	893	6.6	1.34	31.1
	900	152	F063305009010300	523	925	1005	7.4	1.34	34.8
	1000	152	F063305010010300	581	1028	1116	8.2	1.34	38.5
	1100	152	F063305011010300	639	1131	1228	9.0	1.34	42.4
	1200	152	F063305012010300	697	1233	1340	9.8	1.34	45.7
	1400	152	F063305014010300	813	1439	1563	11.5	1.34	52.9
	1600	152	F063305016010300	930	1645	1786	13.1	1.34	6.2
	1800	152	F063305018010300	1046	1850	2009	14.8	1.34	67.5
	2000	152	F063305020010300	1162	2056	2233	16.4	1.34	74.7
	2300	152	F063305023010300	1336	2364	2567	18.9	1.34	85.6
	2600	152	F063305026010300	1511	2672	2902	21.3	1.34	96.6
	3000	152	F063305030010300	1743	3084	3349	24.6	1.34	111.9

550

AUGSTUMS 550 mm	GARUMS	DZIĻUMS		Jauda (W) 45/35/20°C	Jauda (W) 55/45/20°C	Jauda (W) 60/45/20°C	TILPUMS (l)	N-ekponents	SVARS (kg)
Tips 11									
	400	60	F061105504010300	111	193	210	1.2	1.31	7.3
	500	60	F061105505010300	138	242	262	1.5	1.31	8.8
	600	60	F061105506010300	166	290	315	1.8	1.31	1.2
	700	60	F061105507010300	194	339	367	2.1	1.31	11.8
	800	60	F061105508010300	221	387	419	2.4	1.31	13.2
	900	60	F061105509010300	249	435	472	2.7	1.31	14.7
	1000	60	F061105510010300	277	484	524	3.0	1.31	16.1
	1100	60	F061105511010300	304	532	577	3.3	1.31	17.6
	1200	60	F061105512010300	332	580	629	3.6	1.31	19.1
	1400	60	F061105514010300	387	677	734	4.2	1.31	22.5
	1600	60	F061105516010300	443	774	839	4.8	1.31	25.5
	1800	60	F061105518010300	498	871	944	5.4	1.31	28.0
	2000	60	F061105520010300	553	967	1049	6.0	1.31	3.9
	2300	60	F061105523010300	636	1112	1206	6.9	1.31	35.3
	2600	60	F061105526010300	719	1257	1363	7.8	1.31	39.8
	3000	60	F061105530010300	830	1451	1573	9.0	1.31	45.7
Tips 21									
	400	70	F062105504010300	146	255	277	2.4	1.31	1.4
	500	70	F062105505010300	182	319	346	3.0	1.31	12.8
	600	70	F062105506010300	219	383	415	3.7	1.31	15.3
	700	70	F062105507010300	255	447	484	4.3	1.31	17.7
	800	70	F062105508010300	291	511	554	4.9	1.31	2.2
	900	70	F062105509010300	328	574	623	5.5	1.31	22.6
	1000	70	F062105510010300	364	638	692	6.1	1.31	25.6
	1100	70	F062105511010300	401	702	761	6.7	1.31	27.5

550

AUGSTUMS 550 mm	GARUMS	DZIĻUMS		Jauda (W) 45/35/20°C	Jauda (W) 55/45/20°C	Jauda (W) 60/45/20°C	TILPUMS (l)	N-ekponents	SVARS (kg)
	1200	70	F062105512010300	437	766	831	7.3	1.31	30.0
	1400	70	F062105514010300	510	893	969	8.5	1.31	34.9
	1600	70	F062105516010300	583	1021	1107	9.8	1.31	39.8
	1800	70	F062105518010300	656	1149	1246	11.0	1.31	44.7
	2000	70	F062105520010300	728	1276	1384	12.2	1.31	49.6
	2300	70	F062105523010300	838	1468	1592	14.0	1.31	56.9
	2600	70	F062105526010300	947	1659	1799	15.9	1.31	64.3
	3000	70	F062105530010300	1093	1915	2076	18.3	1.31	74.9
Tips 22									
	400	102	F062205504010300	183	322	350	2.4	1.33	12.2
	500	102	F062205505010300	228	403	437	3.0	1.33	14.9
	600	102	F062205506010300	274	484	525	3.7	1.33	17.8
	700	102	F062205507010300	320	564	612	4.3	1.33	2.5
	800	102	F062205508010300	365	645	700	4.9	1.33	23.2
	900	102	F062205509010300	411	725	787	5.5	1.33	26.0
	1000	102	F062205510010300	457	806	875	6.1	1.33	28.7
	1100	102	F062205511010300	502	887	962	6.7	1.33	31.5
	1200	102	F062205512010300	548	967	1050	7.3	1.33	34.3
	1400	102	F062205514010300	639	1128	1225	8.5	1.33	39.8
	1600	102	F062205516010300	731	1289	1400	9.8	1.33	45.3
	1800	102	F062205518010300	822	1451	1575	11.0	1.33	5.8
	2000	102	F062205520010300	913	1612	1750	12.2	1.33	56.3
	2300	102	F062205523010300	1050	1854	2012	14.0	1.33	64.6
	2600	102	F062205526010300	1187	2095	2275	15.9	1.33	72.9
	3000	102	F062205530010300	1370	2418	2625	18.3	1.33	83.9
Tips 33									

550

AUGSTUMS 550 mm	GARUMS	DZIĻUMS		Jauda (W) 45/35/20°C	Jauda (W) 55/45/20°C	Jauda (W) 60/45/20°C	TILPUMS (l)	N-ekponents	SVARS (kg)
	400	152	F063305504010300	250	443	481	3.6	1.34	18.0
	500	152	F063305505010300	312	553	601	4.5	1.34	22.2
	600	152	F063305506010300	374	664	721	5.4	1.34	26.6
	700	152	F063305507010300	437	775	841	6.3	1.34	3.1
	800	152	F063305508010300	499	885	962	7.2	1.34	34.2
	900	152	F063305509010300	561	996	1082	8.1	1.34	38.3
	1000	152	F063305510010300	624	1106	1202	9.0	1.34	42.3
	1100	152	F063305511010300	686	1217	1322	9.9	1.34	46.4
	1200	152	F063305512010300	749	1328	1442	10.8	1.34	5.5
	1400	152	F063305514010300	873	1549	1683	12.6	1.34	58.6
	1600	152	F063305516010300	998	1770	1923	14.4	1.34	66.7
	1800	152	F063305518010300	1123	1992	2164	16.2	1.34	74.8
	2000	152	F063305520010300	1248	2213	2404	18.0	1.34	83.0
	2300	152	F063305523010300	1435	2545	2765	20.7	1.34	95.2
	2600	152	F063305526010300	1622	2877	3125	23.4	1.34	109.4
	3000	152	F063305530010300	1872	3319	3606	27.0	1.34	123.6

600

AUGSTUMS 600 mm	GARUMS	DZIĻUMS		Jauda (W) 45/35/20°C	Jauda (W) 55/45/20°C	Jauda (W) 60/45/20°C	TILPUMS (l)	N-ekponents	SVARS (kg)
Tips 11									
	400	60	F061106004010300	119	208	226	1.3	1.31	7.9
	500	60	F061106005010300	149	260	282	1.6	1.31	9.5
	600	60	F061106006010300	179	313	339	1.9	1.31	11.1
	700	60	F061106007010300	208	365	395	2.2	1.31	12.7
	800	60	F061106008010300	238	417	452	2.6	1.31	14.4
	900	60	F061106009010300	268	469	508	2.9	1.31	16.0
	1000	60	F061106010010300	298	521	565	3.2	1.31	17.6
	1100	60	F061106011010300	327	573	621	3.5	1.31	19.2
	1200	60	F061106012010300	357	625	678	3.8	1.31	2.9
	1400	60	F061106014010300	417	729	791	4.5	1.31	24.4
	1600	60	F061106016010300	476	834	904	5.1	1.31	27.3
	1800	60	F061106018010300	536	938	1017	5.8	1.31	3.5
	2000	60	F061106020010300	595	1042	1130	6.4	1.31	33.7
	2300	60	F061106023010300	685	1198	1299	7.4	1.31	38.6
	2600	60	F061106026010300	774	1354	1469	8.3	1.31	43.4
	3000	60	F061106030010300	893	1563	1695	9.6	1.31	49.8
Tips 21									
	400	70	F062106004010300	155	273	296	2.6	1.32	11.5
	500	70	F062106005010300	194	341	370	3.3	1.32	14.4
	600	70	F062106006010300	233	409	444	4.0	1.32	16.6
	700	70	F062106007010300	272	478	518	4.6	1.32	19.2
	800	70	F062106008010300	311	546	592	5.3	1.32	21.7
	900	70	F062106009010300	349	614	666	5.9	1.32	24.3
	1000	70	F062106010010300	388	682	740	6.6	1.32	26.8
	1100	70	F062106011010300	427	751	814	7.3	1.32	29.4

600

AUGSTUMS 600 mm	GARUMS	DZIĻUMS		Jauda (W) 45/35/20°C	Jauda (W) 55/45/20°C	Jauda (W) 60/45/20°C	TILPUMS (l)	N-ekponents	SVARS (kg)
	1200	70	F062106012010300	466	819	888	7.9	1.32	31.9
	1400	70	F062106014010300	544	955	1036	9.2	1.32	37.3
	1600	70	F062106016010300	621	1092	1184	10.6	1.32	42.1
	1800	70	F062106018010300	699	1228	1332	11.9	1.32	47.2
	2000	70	F062106020010300	777	1365	1481	13.2	1.32	52.3
	2300	70	F062106023010300	893	1569	1703	15.2	1.32	60.0
	2600	70	F062106026010300	1009	1774	1925	17.2	1.32	67.6
	3000	70	F062106030010300	1165	2047	2221	19.8	1.32	77.8
Tips 22									
	400	102	F062206004010300	195	346	375	2.6	1.34	13.8
	500	102	F062206005010300	244	432	469	3.3	1.34	16.8
	600	102	F062206006010300	293	518	563	4.0	1.34	19.6
	700	102	F062206007010300	342	605	657	4.6	1.34	22.6
	800	102	F062206008010300	391	691	750	5.3	1.34	25.5
	900	102	F062206009010300	440	777	844	5.9	1.34	28.4
	1000	102	F062206010010300	488	864	938	6.6	1.34	31.4
	1100	102	F062206011010300	537	950	1032	7.3	1.34	34.3
	1200	102	F062206012010300	586	1037	1126	7.9	1.34	37.2
	1400	102	F062206014010300	684	1209	1313	9.2	1.34	43.9
	1600	102	F062206016010300	782	1382	1501	10.6	1.34	49.0
	1800	102	F062206018010300	879	1555	1688	11.9	1.34	54.9
	2000	102	F062206020010300	977	1728	1876	13.2	1.34	6.7
	2300	102	F062206023010300	1124	1987	2157	15.2	1.34	69.5
	2600	102	F062206026010300	1270	2246	2439	17.2	1.34	78.3
	3000	102	F062206030010300	1465	2591	2814	19.8	1.34	90.0
Tips 33									

600

AUGSTUMS 600 mm	GARUMS	DZIĻUMS		Jauda (W) 45/35/20°C	Jauda (W) 55/45/20°C	Jauda (W) 60/45/20°C	TILPUMS (l)	N-ekponents	SVARS (kg)
	400	152	F063306004010300	266	473	514	3.9	1.35	2.8
	500	152	F063306005010300	333	592	643	4.9	1.35	24.5
	600	152	F063306006010300	399	710	771	5.9	1.35	28.9
	700	152	F063306007010300	466	828	900	6.9	1.35	33.3
	800	152	F063306008010300	532	946	1029	7.8	1.35	37.6
	900	152	F063306009010300	599	1065	1157	8.8	1.35	42.2
	1000	152	F063306010010300	665	1183	1286	9.8	1.35	46.4
	1100	152	F063306011010300	732	1301	1414	10.8	1.35	5.9
	1200	152	F063306012010300	798	1420	1543	11.8	1.35	55.2
	1400	152	F063306014010300	932	1656	1800	13.7	1.35	64.0
	1600	152	F063306016010300	1065	1893	2057	15.7	1.35	72.8
	1800	152	F063306018010300	1198	2129	2314	17.6	1.35	81.5
	2000	152	F063306020010300	1331	2366	2571	19.6	1.35	9.4
	2300	152	F063306023010300	1530	2721	2957	22.5	1.35	105.5
	2600	152	F063306026010300	1730	3076	3343	25.5	1.35	116.7
	3000	152	F063306030010300	1996	3549	3857	29.4	1.35	134.3

900

AUGSTUMS 900 mm	GARUMS	DZIĻUMS		Jauda (W) 45/35/20°C	Jauda (W) 55/45/20°C	Jauda (W) 60/45/20°C	TILPUMS (l)	N-ekponents	SVARS (kg)
Tips 11									
	400	60	F061109004010300	166	291	316	1.8	1.32	11.9
	500	60	F061109005010300	208	364	395	2.3	1.32	14.3
	600	60	F061109006010300	249	437	474	2.7	1.32	16.8
	700	60	F061109007010300	291	510	553	3.1	1.32	19.2
	800	60	F061109008010300	332	583	632	3.6	1.32	21.7
	900	60	F061109009010300	374	655	711	4.0	1.32	24.2
	1000	60	F061109010010300	415	728	790	4.5	1.32	26.7
	1100	60	F061109011010300	457	801	869	5.0	1.32	29.2
	1200	60	F061109012010300	498	874	948	5.4	1.32	31.6
	1400	60	F061109014010300	581	1019	1106	6.3	1.32	36.6
	1600	60	F061109016010300	664	1165	1264	7.2	1.32	41.6
	1800	60	F061109018010300	747	1311	1422	8.1	1.32	46.5
	2000	60	F061109020010300	830	1456	1580	9.0	1.32	51.5
	2300	60	F061109023010300	955	1675	1817	10.3	1.32	58.9
	2600	60	F061109026010300	1079	1893	2054	11.7	1.32	66.4
	3000	60	F061109030010300	1245	2185	2370	13.5	1.32	76.3
Tips 21									
	400	70	F062109004010300	212	376	408	3.6	1.34	16.7
	500	70	F062109005010300	265	470	510	4.5	1.34	2.6
	600	70	F062109006010300	318	563	612	5.4	1.34	24.3
	700	70	F062109007010300	371	657	714	6.3	1.34	28.6
	800	70	F062109008010300	424	751	816	7.2	1.34	31.8
	900	70	F062109009010300	477	845	918	8.1	1.34	35.6
	1000	70	F062109010010300	530	939	1020	9.0	1.34	39.5
	1100	70	F062109011010300	583	1033	1122	9.9	1.34	43.2

900

AUGSTUMS 900 mm	GARUMS	DZIĻUMS		Jauda (W) 45/35/20°C	Jauda (W) 55/45/20°C	Jauda (W) 60/45/20°C	TILPUMS (l)	N-ekponents	SVARS (kg)
	1200	70	F062109012010300	636	1127	1224	10.8	1.34	47.0
	1400	70	F062109014010300	742	1315	1428	12.6	1.34	54.5
	1600	70	F062109016010300	849	1502	1632	14.4	1.34	62.8
	1800	70	F062109018010300	955	1690	1836	16.2	1.34	69.6
	2000	70	F062109020010300	1061	1878	2040	18.0	1.34	77.2
	2300	70	F062109023010300	1220	2160	2346	20.7	1.34	88.5
	2600	70	F062109026010300	1379	2442	2652	23.4	1.34	101.8
	3000	70	F062109030010300	1591	2817	3060	27.0	1.34	115.0
Tips 22									
	400	102	F062209004010300	268	478	520	3.6	1.36	19.8
	500	102	F062209005010300	335	597	649	4.5	1.36	24.2
	600	102	F062209006010300	402	717	779	5.4	1.36	28.7
	700	102	F062209007010300	469	836	909	6.3	1.36	33.2
	800	102	F062209008010300	536	956	1039	7.2	1.36	37.7
	900	102	F062209009010300	603	1075	1169	8.1	1.36	42.2
	1000	102	F062209010010300	670	1194	1299	9.0	1.36	46.7
	1100	102	F062209011010300	737	1314	1429	9.9	1.36	51.2
	1200	102	F062209012010300	804	1433	1559	10.8	1.36	55.7
	1400	102	F062209014010300	938	1672	1818	12.6	1.36	64.7
	1600	102	F062209016010300	1072	1911	2078	14.4	1.36	73.7
	1800	102	F062209018010300	1205	2150	2338	16.2	1.36	82.7
	2000	102	F062209020010300	1339	2389	2598	18.0	1.36	91.6
	2300	102	F062209023010300	1540	2747	2987	20.7	1.36	107.2
	2600	102	F062209026010300	1741	3106	3377	23.4	1.36	118.7
	3000	102	F062209030010300	2009	3583	3896	27.0	1.36	136.6
Tips 33									

900

AUGSTUMS 900 mm	GARUMS	DZIĻUMS		Jauda (W) 45/35/20°C	Jauda (W) 55/45/20°C	Jauda (W) 60/45/20°C	TILPUMS (l)	N-ekponents	SVARS (kg)
	400	152	F063309004010300	364	651	708	5.3	1.36	28.7
	500	152	F063309005010300	455	814	885	6.7	1.36	35.4
	600	152	F063309006010300	547	976	1062	8.0	1.36	42.9
	700	152	F063309007010300	638	1139	1239	9.3	1.36	48.8
	800	152	F063309008010300	729	1302	1416	10.6	1.36	55.5
	900	152	F063309009010300	820	1465	1593	12.0	1.36	62.3
	1000	152	F063309010010300	911	1627	1770	13.0	1.36	69.0
	1100	152	F063309011010300	1002	1790	1947	14.6	1.36	75.6
	1200	152	F063309012010300	1093	1953	2124	16.0	1.36	82.0
	1400	152	F063309014010300	1275	2278	2478	19.0	1.36	96.0
	1600	152	F063309016010300	1457	2604	2832	21.3	1.36	111.3
	1800	152	F063309018010300	1640	2929	3186	23.9	1.36	122.6
	2000	152	F063309020010300	1822	3255	3540	26.6	1.36	136.0
	2300	152	F063309023010300	2095	3743	4071	30.6	1.36	156.8
	2600	152	F063309026010300	2368	4231	4602	34.6	1.36	176.2
	3000	152	F063309030010300	2733	4882	5310	39.9	1.36	207.0