Data sheet
2026-10-26

Vertical

An elegant addition to any interior

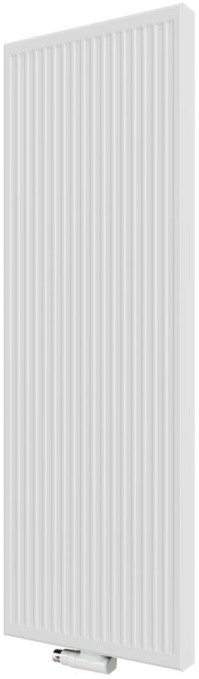

- Sleek design
- High space efficiency
- High heating power
- Optional towel bar
- Variety of colours

Vertical is a classic vertical panel radiator that's slim and discreet for optimal use of wall space in any room. This panel radiator is small in width but great in heating power. A towel rail is available for extra functionality.

Area of application
Contemporary alternative to horizontal radiators, manufactured using steel. Perfect for applications where wall space is limited. Suitable for indirect domestic and commercial heating. Features sleek flat steel front plate with side panels and top grille. Comes with 6 x ½" BSP Connections.

Sizing
Use a Heat Demand Calculator to determine which heat output is required from the large range of Tinos V vertical radiators.

Usage
Ensure to install the air vent and plug packs included in the packaging. For enhanced efficiency and convenience, Thermostatic Radiator Valves can be used to control room temperature. Follow the instructions provided for a secure mounting using the brackets, screws, and dowels supplied.

AMA Text
Vertical panel radiator with slim, sleek design, featuring a flat steel plate, side panels, and top grille. Available with 6 x ½" BSP Connections. Suitable for 2 pipe pumped indirect domestic and commercial heating. Includes air vent and plug packs for easy installation. Compatible with Thermostatic Radiator Valves for temperature control. Optional towel bar available for kitchens and bathrooms. Includes mounting brackets, screws, dowels, side covers, brass blind plugs, and air-vent. Standard colour RAL 9016 white; other colours available on request.

Specifications

PROPERTIES	UNIT	VALUES
ETIM Class		EC011022
Material		Steel
Type		10, 20, 21, 22
Surface structure		Profiled
Max working pressure	bar	10
Number of standard connections		4
Heat output according to recognized EN 442 laboratory		Yes
Max. Operating Temperature	°C	110
Standard color		Yes
Color		White
RAL number		9016
Grill/Cover plate		Yes
Grill/Cover plate		Yes
Gloss value		Glossy
Thread dimension (inch)		1/2 inch
Thread connection		Internal thread
With single-point connection		Yes
With air vent connection		Yes
With air valve/vent		Yes
With drain option		Yes

Documents

DOCUMENTS	DOCUMENT TYPE	LINK
Colour options	Brochure	https://asset.productmarketingcloud.com/api/assetstorage/3577_559d73e5-f4c7-4bc1-a5d1-5d81098413e7
Myson Complete Solutions - Full Brochure	Brochure	https://asset.productmarketingcloud.com/api/assetstorage/3577_8031f314-369f-4cf3-af0a-a9fc03976b1b
Myson Panel Radiators - range brochure	Brochure	https://asset.productmarketingcloud.com/api/assetstorage/3577_c47ba35e-7d74-4e42-8f64-965cfeec973c
Range brochure	Brochure	https://asset.productmarketingcloud.com/api/assetstorage/3577_5a942de7-8bcb-4179-a4fc-d890b5c692f3
Product Warranty	Warranty	https://asset.productmarketingcloud.com/api/assetstorage/3577_ee6ba5d6-3073-4ac1-8de0-f0c719a2c4ab
Vertical Connection Options	Installation	https://asset.productmarketingcloud.com/api/assetstorage/3577_c0856296-aeb4-4f6b-b231-2268d3a33eaa
Installation Instruction Compact Purmo	TechDia	https://asset.productmarketingcloud.com/api/assetstorage/3577_2da398bb-5820-4a58-af2d-62333aa4e65e

Resources

ProductImage - New_Vertical-MAIN picture

ProductImage - New_Vertical product image

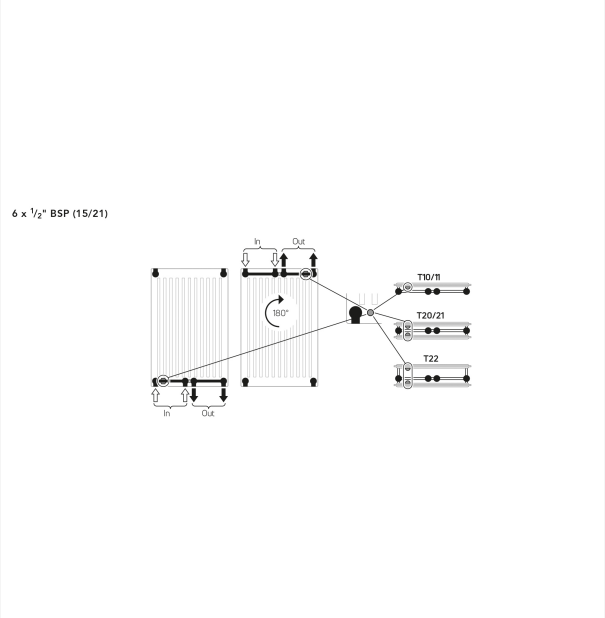

Installation - Vertical Connection Options

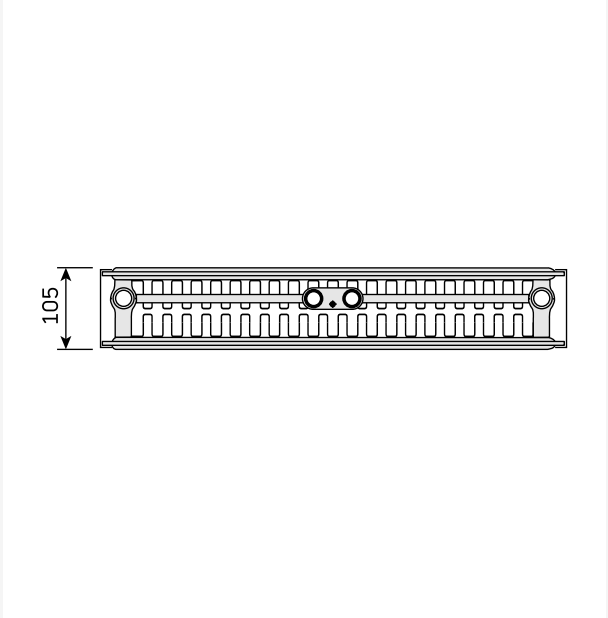

DimensionalDrawing - New_Vertical top view

Resources

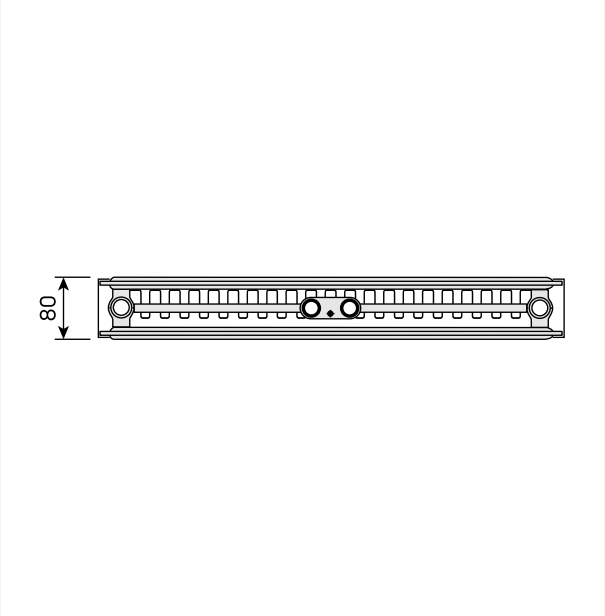

DimensionalDrawing - New_Vertical top view

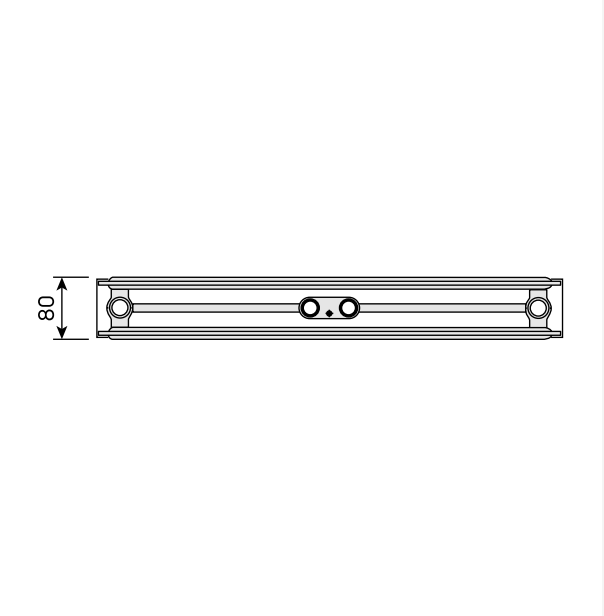

DimensionalDrawing - New_Vertical top view

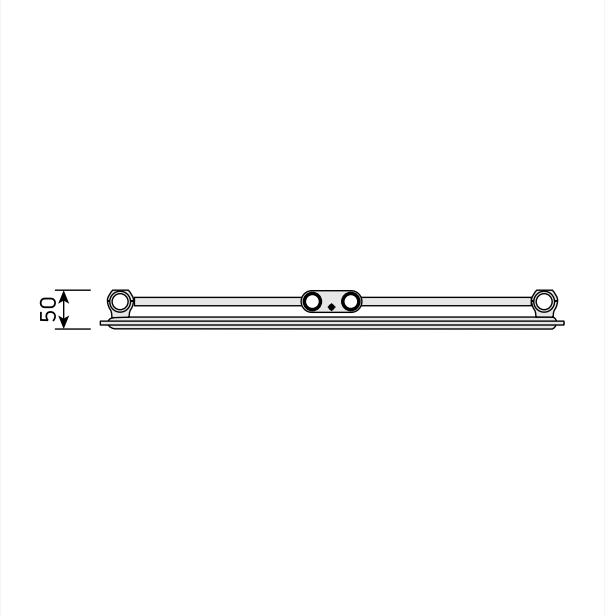

DimensionalDrawing - New_Vertical top view

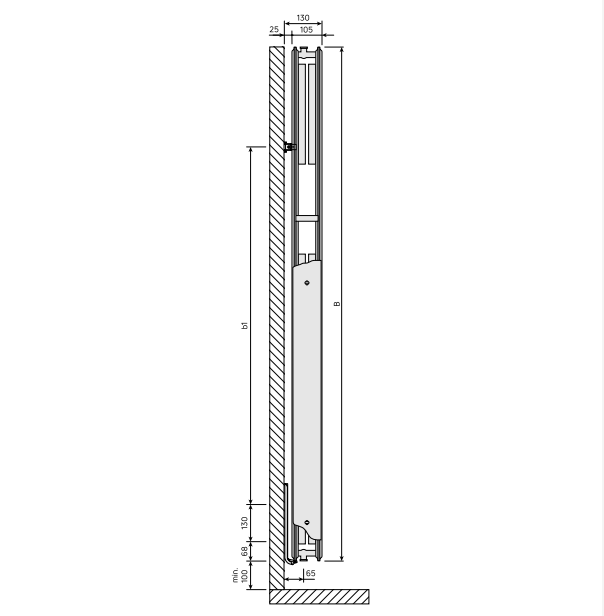

DimensionalDrawing - New_Vertical side view

Resources

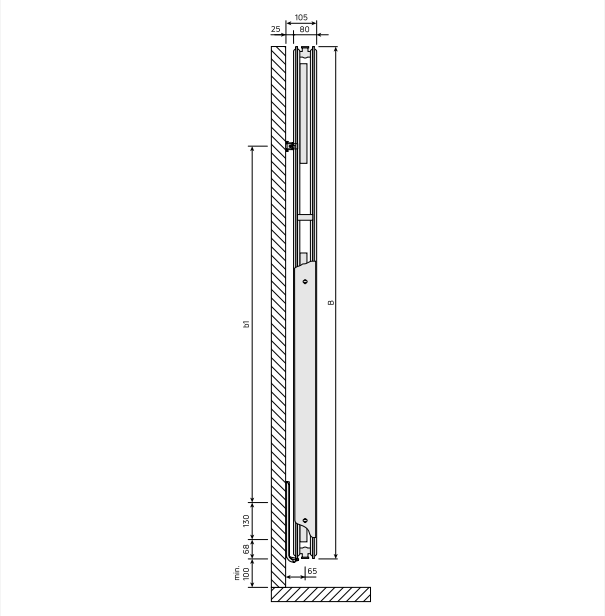

DimensionalDrawing - New_Vertical side view

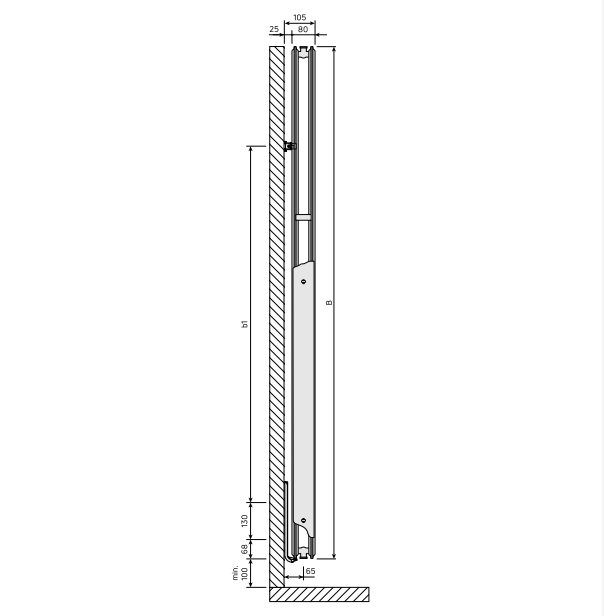

DimensionalDrawing - New_Vertical side view

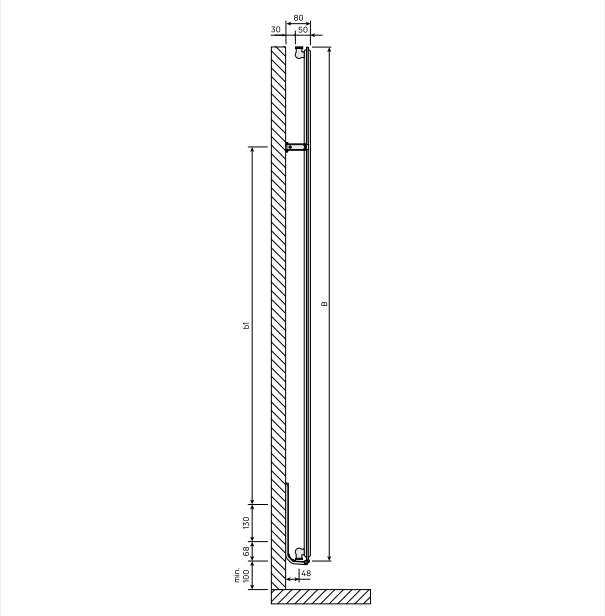

DimensionalDrawing - New_Vertical side view

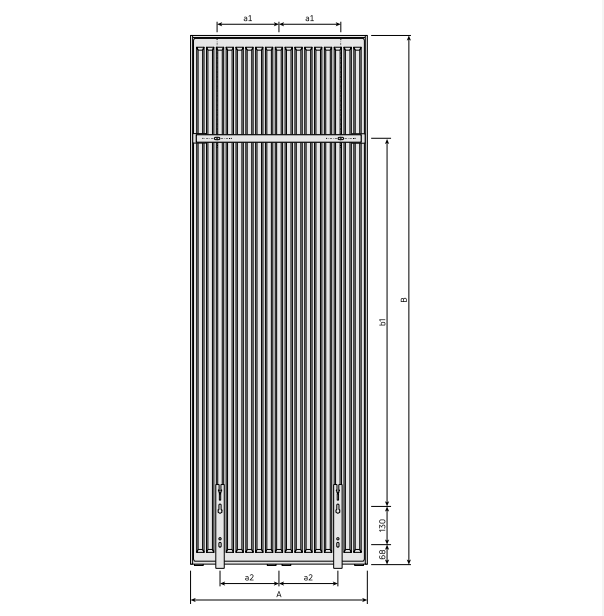

DimensionalDrawing - New_Vertical rear view

Resources

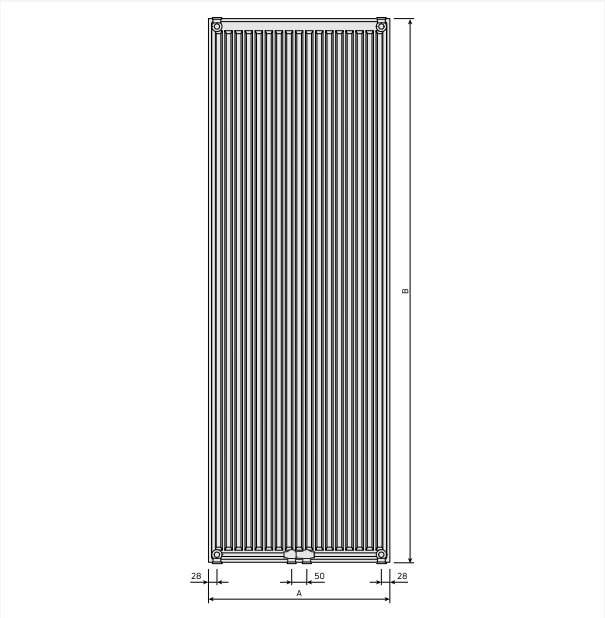

DimensionalDrawing - New_Vertical rear view

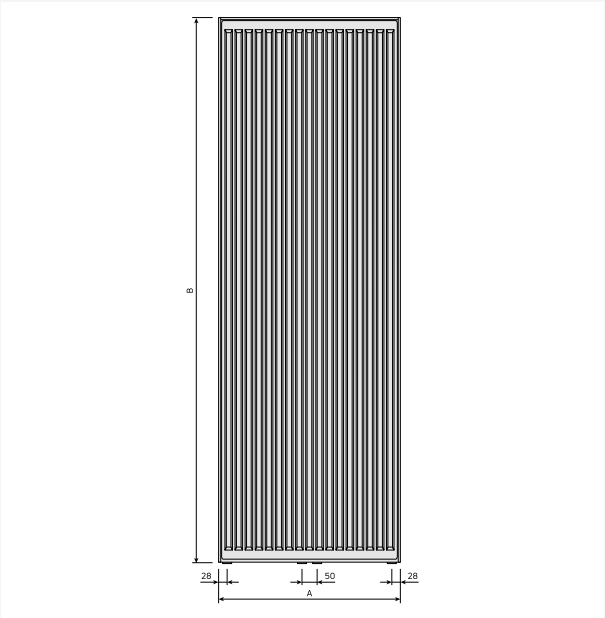

DimensionalDrawing - New_Vertical front view

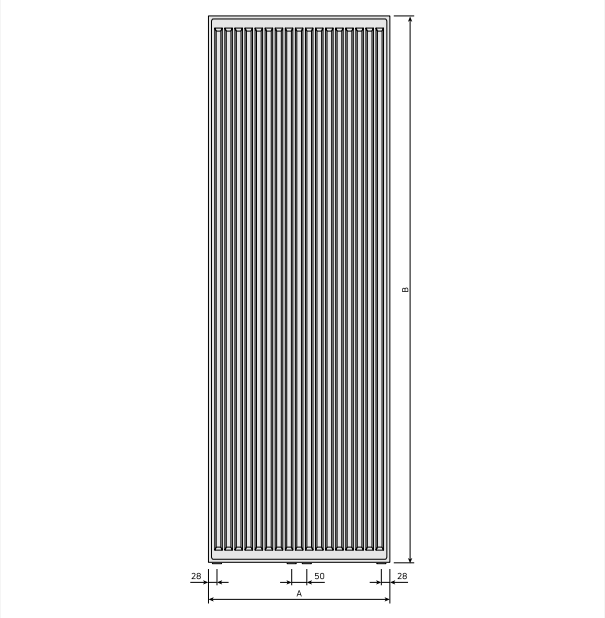

DimensionalDrawing - New_Vertical front view

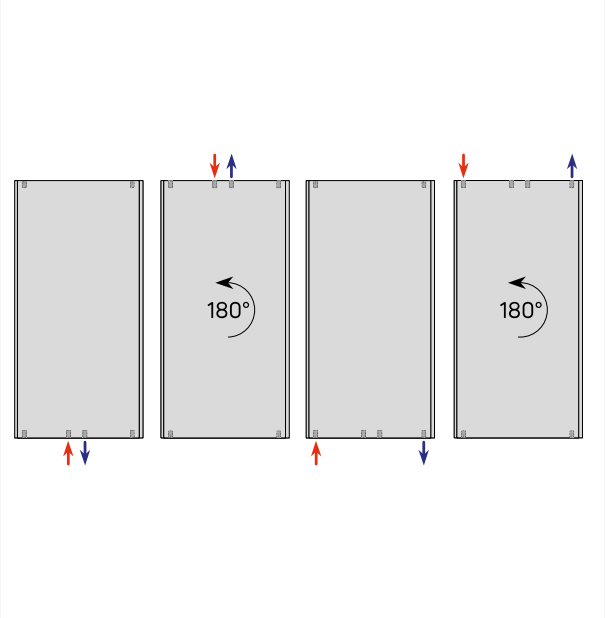

DimensionalDrawing - Verticals connection options

Resources

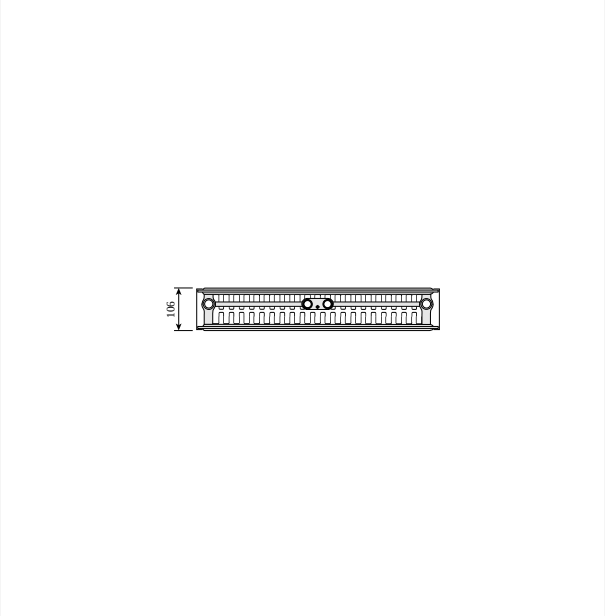

DimensionalDrawing - Vertical, type 22, top view

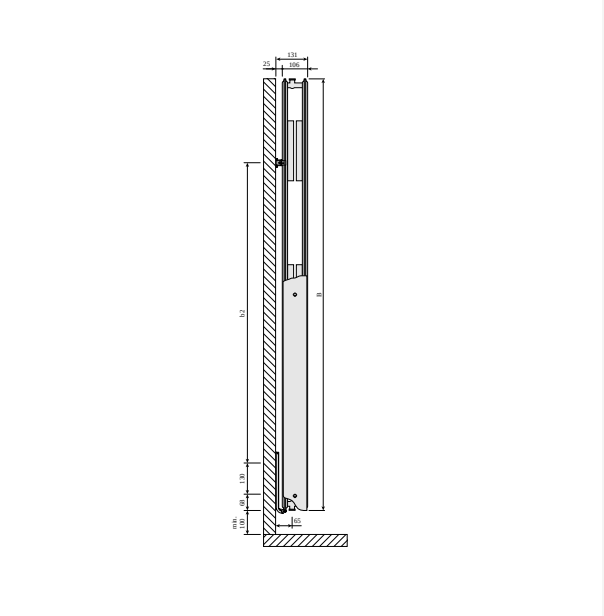

DimensionalDrawing - Vertical type 22, side view

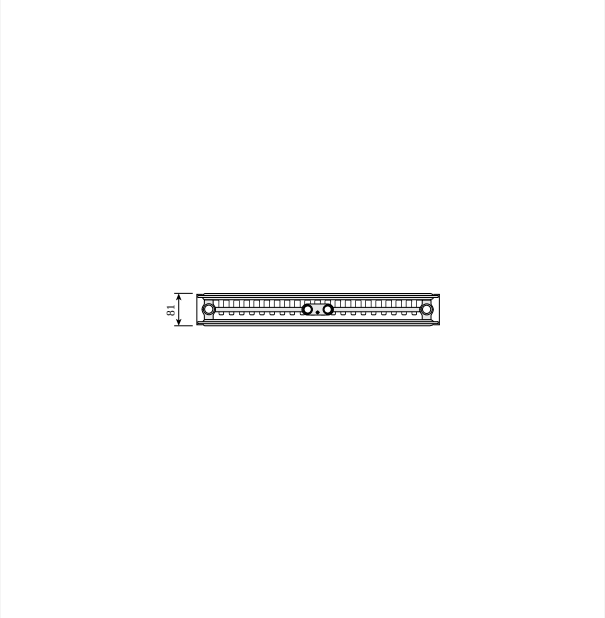

DimensionalDrawing - Vertical, type 21, top view

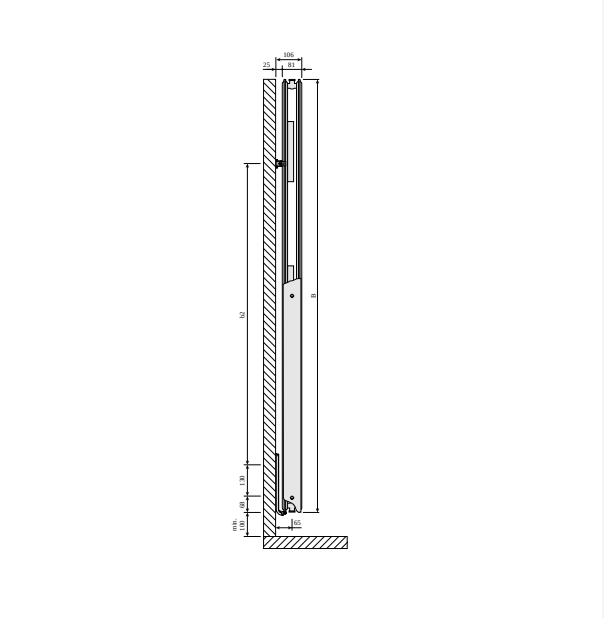

DimensionalDrawing - Vertical type 21, side view

Resources

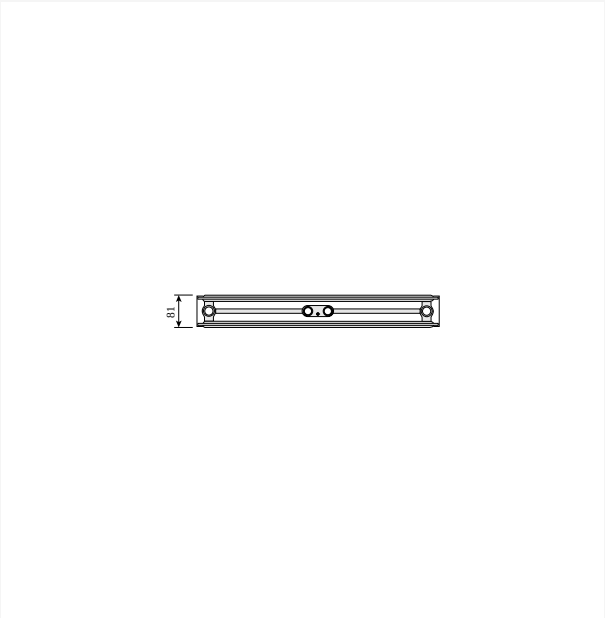

DimensionalDrawing - Vertical, type 20, top view

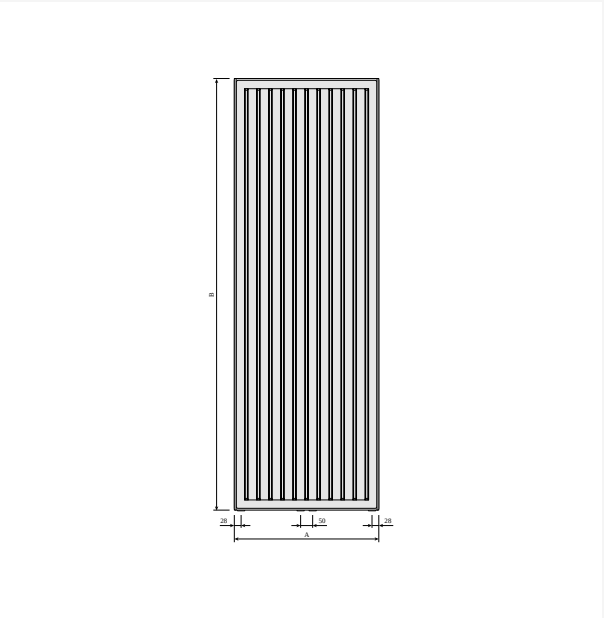

DimensionalDrawing - Vertical types 20, 21, 22, front view - with side covers

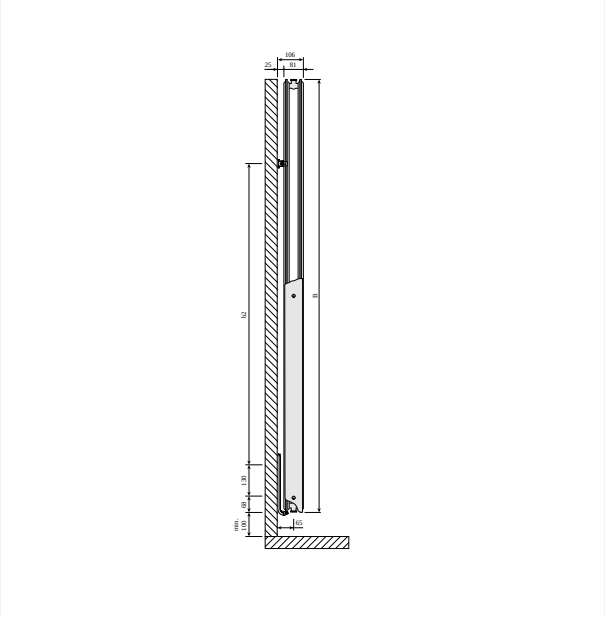

DimensionalDrawing - Vertical type 20, side view

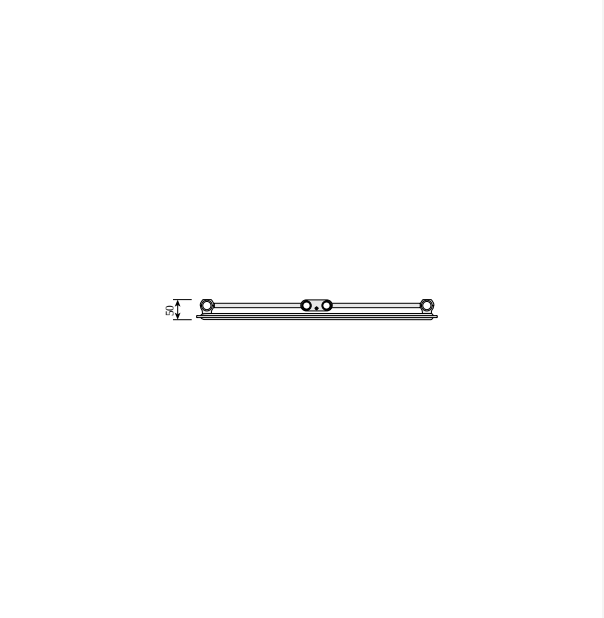

DimensionalDrawing - Vertical, type 10, top view

Resources

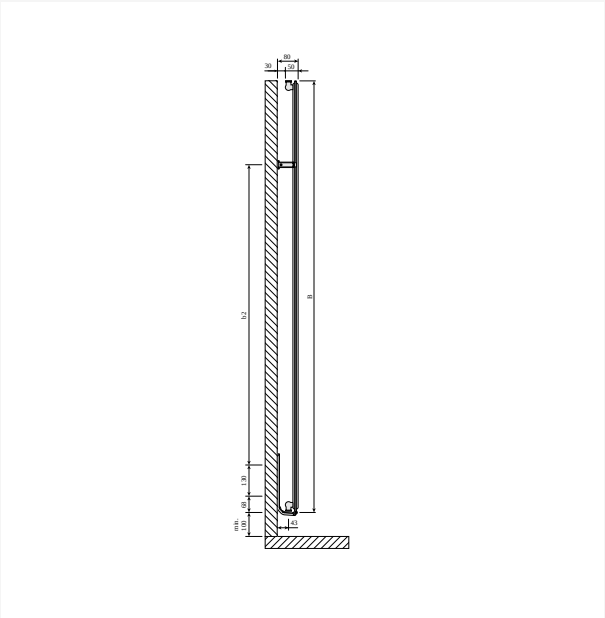

DimensionalDrawing - Vertical type 10, side view

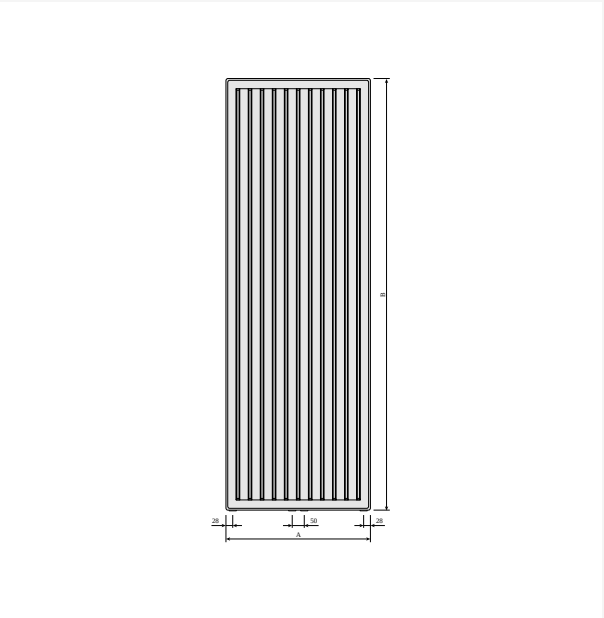

DimensionalDrawing - Vertical type 10, front view - without side covers

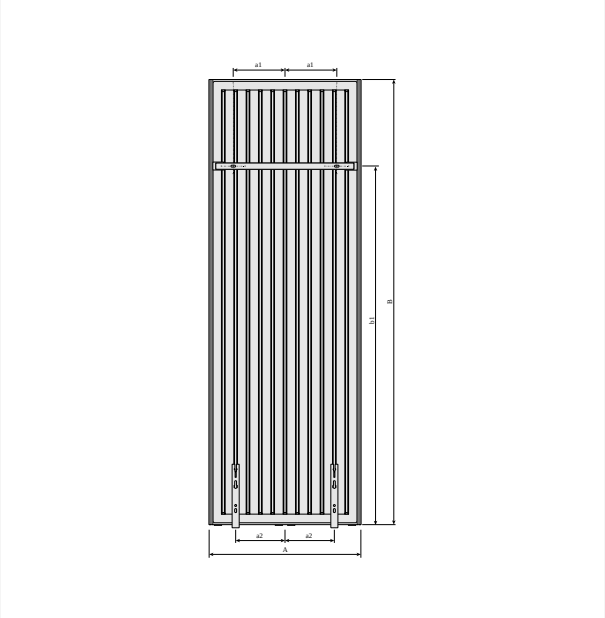

DimensionalDrawing - Vertical with MCW6 brackets, back view

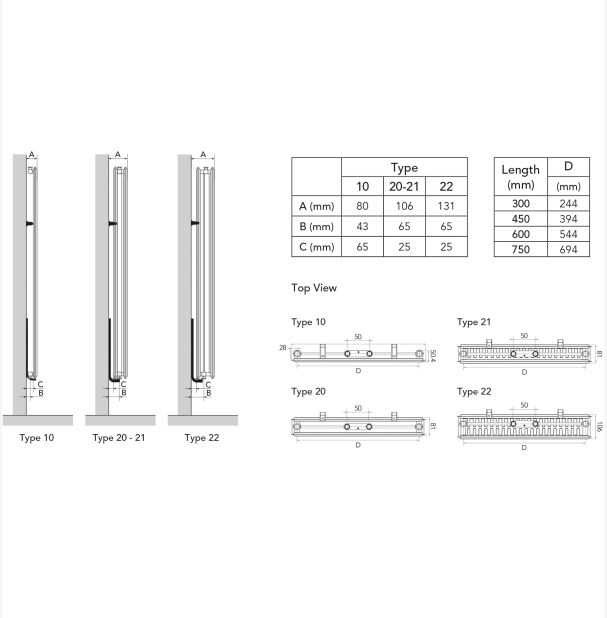

	Type		
	10	20-21	22
A (mm)	80	106	131
B (mm)	43	65	65
C (mm)	65	25	25

Length (mm)	D (mm)
300	244
450	394
600	544
750	694

DimensionalDrawing - Myson Vertical - Mounting Positions & Dimensions

Related products

Air Vent Key (Spare)

Valve Set Vertical

1800

HEIGHT 1800 mm	LENGTH	DEPTH	ITEM NO	(Btu/H) 55/45/20°C	(Btu/H) 75/65/20°C	VOLUME (l)	N-EXPONENT	WEIGHT (kg)
Type 10								
	450	50	VER180SP45	1512	2907	3.8	1.28	16.5
	600	50	VER180SP60	1948	3760	4.9	1.29	21.7
	750	50	VER180SP75	2368	4593	6.0	1.30	26.9
Type 20								
	300	80	VER180DP30	1597	3084	4.8	1.29	25.1
	450	80	VER180DP45	2289	4446	7.2	1.30	35.3
	600	80	VER180DP60	2955	5763	9.7	1.31	45.5
	750	80	VER180DP75	3596	7046	12.1	1.32	55.6
Type 21								
	300	80	VER180DPX30	1812	3535	4.8	1.31	26.8
	450	80	VER180DPX45	2658	5207	7.2	1.32	38.8
	600	80	VER180DPX60	3487	6855	9.7	1.32	50.8
	750	80	VER180DPX75	4303	8482	12.1	1.33	62.9
Type 22								
	300	105	VER180DC30	2092	4084	4.8	1.31	29.7
	450	105	VER180DC45	3088	6053	7.3	1.32	42.8
	600	105	VER180DC60	4071	8001	9.7	1.32	55.9
	750	105	VER180DC75	5036	9936	12.2	1.33	69.0

1950

HEIGHT 1950 mm	LENGTH	DEPTH	ITEM NO	(Btu/H) 55/45/20°C	(Btu/H) 75/65/20°C	VOLUME (l)	N-EXPONENT	WEIGHT (kg)
Type 10								
	450	50	VER195SP45	1628	3136	4.1	1.28	17.9
	600	50	VER195SP60	2098	4057	5.4	1.29	23.5
	750	50	VER195SP75	2552	4954	6.7	1.30	29.2
Type 20								
	300	80	VER195DP30	1706	3303	5.2	1.29	27.1
	450	80	VER195DP45	2450	4760	7.8	1.30	38.2
	600	80	VER195DP60	3160	6165	10.4	1.31	49.3
	750	80	VER195DP75	3849	7541	13.0	1.32	60.4
Type 21								
	300	80	VER195DPX30	1935	3780	5.2	1.31	28.9
	450	80	VER195DPX45	2839	5568	7.8	1.32	41.8
	600	80	VER195DPX60	3722	7329	10.4	1.33	54.7
	750	80	VER195DPX75	4589	9069	13.0	1.33	67.6
Type 22								
	300	105	VER195DC30	2214	4326	5.3	1.31	31.8
	450	105	VER195DC45	3276	6411	7.8	1.31	45.7
	600	105	VER195DC60	4320	8475	10.4	1.32	59.7
	750	105	VER195DC75	5347	10523	13.1	1.33	73.7