Data sheet
2026-10-24

Premier Metric

Myson Premier Metric panel radiator has a unique round top.

- Stylish design
- Extra safety
- Maximum flexibility
- High heat output
- Numerous sizes available (also imperial, see Premier HE)

Myson **Premier Metric** is renowned for its round top, providing extra safety while adding a unique style and aesthetic appeal. Available in 168 different sizes, it comes in single convector, double panel extra, and double convector types. Suitable for low-temperature systems and offers impressive heat output, making it perfect for any project. See also Premier HE for models in imperial sizes.

Area of application
The Premier Metric radiator is suitable for both domestic and commercial heating applications. These include traditional and modern room designs. With three types (single convector, double panel extra, double convector) and different height options (300mm to 700mm), it offers flexibility as well as impressive heat outputs with 4-tap connections and high safety standards.

Sizing
For selecting or calculating thermal heat power output, use our design service. For quick selection, use our brochure.

Usage
Ensure the radiator is installed by a professional. It is best for use on 2-pipe pumped indirect systems. With 4 x ½" BSP connections, it's suitable for maximum working temperatures of 100°C. This radiator has been tested to a pressure of 7 bar and can withstand a working pressure of 5.4 bar. All air vents and plug packs come included in the packaging.

AMA Text
The Premier Metric from Myson is designed for both domestic and commercial heating applications. Manufactured to the highest standards, it's available in 168 sizes and three types: single convector, double panel extra, and double convector. Nominal height options range from 300mm to 700mm, with lengths from 400mm to 3000mm. All sizes feature 4 x ½" BSP connections. The radiator includes a 10-year warranty from purchase, tested to BS EN 442 standards. Maximum operating pressure 5.4 bar, tested at 7 bar, and operating temperature up to 100°C. Integral air vent and plug packs are included. Employed under two-pipe pumped indirect systems, it offers superior heat output with additional safety due to its round top design.

Specifications

PROPERTIES	UNIT	VALUES
ETIM Class		EC011022
Material		Steel
Type		11, 21, 22
Surface structure		Profiled
Max working pressure	bar	5.4
Number of standard connections		4
Heat output according to recognized EN 442 laboratory		Yes
Max. Operating Temperature	°C	100
Standard color		Yes
Color		White
RAL number		9016
Grill/Cover plate		Yes
Grill/Cover plate		Yes
Gloss value		Glossy
Thread dimension (inch)		1/2 inch
Thread connection		Internal thread
With single-point connection		Yes
With air vent connection		Yes
With air valve/vent		Yes
With drain option		Yes

Documents

DOCUMENTS	DOCUMENT TYPE	LINK
Myson Complete Solutions - Full Brochure	Brochure	https://asset.productmarketingcloud.com/api/assetstorage/3577_8031f314-369f-4cf3-af0a-a9fc03976b1b
Myson Panel Radiators - range brochure	Brochure	https://asset.productmarketingcloud.com/api/assetstorage/3577_c47ba35e-7d74-4e42-8f64-965cfeec973c
Product Warranty	Warranty	https://asset.productmarketingcloud.com/api/assetstorage/3577_ee6ba5d6-3073-4ac1-8de0-f0c719a2c4ab
Premier Metric Connection Options	Installation	https://asset.productmarketingcloud.com/api/assetstorage/3577_8b8f0398-5d18-4c8a-9495-81bbd2e7a247

Resources

ProductImage - Premier Metric

ProductImage - Premier Metric

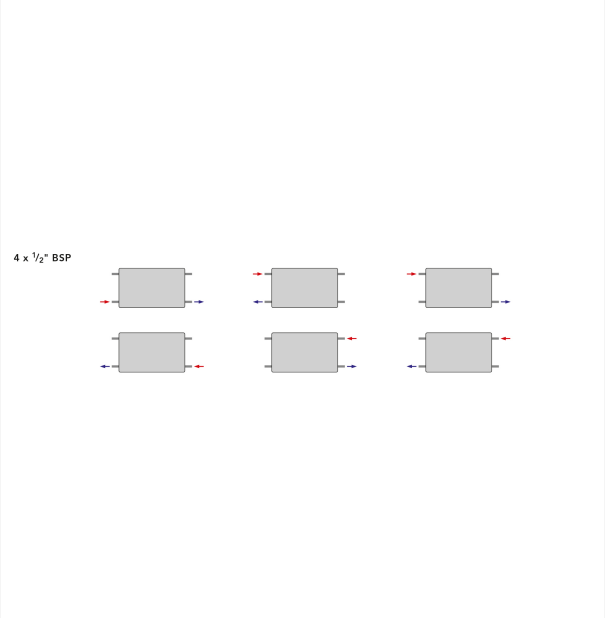

Installation - Premier Metric Connection Options

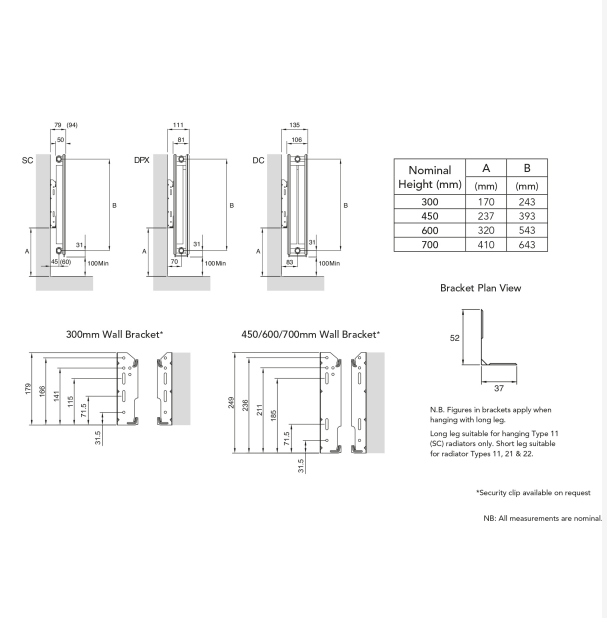

DimensionalDrawing - Premier Metric Mounting Positions, Dimensions and Wall Brackets

Resources

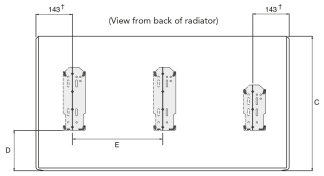

N.B. Radiators up to and including 1600mm long have two brackets. Radiators 1800mm and longer have three brackets. The position of the centre bracket is given in the table.

† 118mm from each end for 300mm long radiators only.

Nominal Height (mm)	C (mm)	D (mm)
300	300	70
450	450	137
600	600	220
700	700	310

Nominal Length (mm)	E (mm)
1800	762
2000	864
2200	965
2400	1067
2600	1168
2800	1270
3000	1372

DimensionalDrawing - Premier Metric Bracket Positions and Dimensions

Related products

Matchmate

Matchmaster

Matchmaster PF90

Decorative TRV Valves

Decorative Modern Valves

Decorative TRV Valve Pack

Decorative Slimline Valves

Decorative Traditional Valves

Myson Plus Manual Valves

Myson Plus Radiator Packs

Myson Plus TRV Valves

TRV2

Related products

TRV2 Radiator Packs

300

HEIGHT 300 mm	LENGTH	DEPTH	ITEM NO	(Btu/H) 55/45/20°C	(Btu/H) 75/65/20°C	VOLUME (l)	N-EXPONENT	WEIGHT (kg)
Type 11								
	400	50	4PM30SC40	356	680	1.0	1.27	3.4
	800	50	4PM30SC80	730	1395	2.0	1.27	6.5
	1200	50	4PM30SC120	1103	2109	3.0	1.27	9.5
	1600	50	4PM30SC160	1477	2824	4.0	1.27	12.2
	2000	50	4PM30SC200	1850	3537	6.0	1.27	15.6
	2400	50	4PM30SC240	2223	4251	7.0	1.27	18.6
	3000	50	4PM30SC300	2783	5322	8.0	1.27	23.1
Type 21								
	400	81	4PM30DPX40	540	1037	2.0	1.28	5.8
	800	81	4PM30DPX80	1108	2127	5.0	1.28	11.1
	1200	81	4PM30DPX120	1675	3214	7.0	1.28	16.6
	1600	81	4PM30DPX160	2243	4304	9.0	1.28	22.0
	2000	81	4PM30DPX200	2810	5392	11.0	1.28	26.8
Type 22								
	400	106	4PM30DC40	686	1322	2.0	1.28	6.5
	800	106	4PM30DC80	1408	2712	5.0	1.28	12.5
	1200	106	4PM30DC120	2129	4098	7.0	1.28	2.4
	1600	106	4PM30DC160	2851	5489	9.0	1.28	24.7
	2000	106	4PM30DC200	3571	6875	11.0	1.28	31.2
	2400	106	4PM30DC240	4291	8262	14.0	1.28	37.5
	3000	106	4PM30DC300	5373	10345	17.0	1.28	46.7

450

HEIGHT 450 mm	LENGTH	DEPTH	ITEM NO	(Btu/H) 55/45/20°C	(Btu/H) 75/65/20°C	VOLUME (l)	N-EXPONENT	WEIGHT (kg)
Type 11								
	400	50	4PM45SC40	512	982	1.0	1.28	4.9
	500	50	4PM45SC50	647	1241	2.0	1.28	6.3
	600	50	4PM45SC60	782	1500	2.0	1.28	7.2
	700	50	4PM45SC70	916	1757	2.0	1.28	8.3
	800	50	4PM45SC80	1051	2016	3.0	1.28	9.5
	900	50	4PM45SC90	1184	2272	3.0	1.28	1.9
	1000	50	4PM45SC100	1319	2531	3.0	1.28	11.9
	1100	50	4PM45SC110	1454	2790	4.0	1.28	13.1
	1200	50	4PM45SC120	1588	3046	4.0	1.28	14.3
	1400	50	4PM45SC140	1857	3562	5.0	1.28	16.3
	1600	50	4PM45SC160	2127	4079	5.0	1.28	18.6
	1800	50	4PM45SC180	2395	4595	6.0	1.28	21.6
	2000	50	4PM45SC200	2664	5110	7.0	1.28	23.7
	2200	50	4PM45SC220	2933	5626	7.0	1.28	26.4
	2400	50	4PM45SC240	3202	6142	8.0	1.28	28.4
	2600	50	4PM45SC260	3471	6657	9.0	1.28	3.7
	2800	50	4PM45SC280	3740	7173	10.0	1.28	33.8
	3000	50	4PM45SC300	4009	7689	10.0	1.28	35.4
Type 21								
	400	81	4PM45DPX40	748	1446	3.0	1.29	8.3
	500	81	4PM45DPX50	945	1827	3.0	1.29	1.6
	600	81	4PM45DPX60	1142	2208	4.0	1.29	12.2
	700	81	4PM45DPX70	1337	2585	5.0	1.29	14.2
	800	81	4PM45DPX80	1534	2966	5.0	1.29	16.2
	900	81	4PM45DPX90	1729	3344	6.0	1.29	17.7

450

HEIGHT 450 mm	LENGTH	DEPTH	ITEM NO	(Btu/H) 55/45/20°C	(Btu/H) 75/65/20°C	VOLUME (l)	N-EXPONENT	WEIGHT (kg)
	1000	81	4PM45DPX100	1926	3725	7.0	1.29	2.2
	1100	81	4PM45DPX110	2123	4106	7.0	1.29	22.3
	1200	81	4PM45DPX120	2318	4483	8.0	1.29	23.9
	1400	81	4PM45DPX140	2710	5242	9.0	1.29	27.8
	1600	81	4PM45DPX160	3104	6004	11.0	1.29	31.5
	1800	81	4PM45DPX180	3497	6762	12.0	1.29	36.2
	2000	81	4PM45DPX200	3889	7521	13.0	1.29	4.3
Type 22								
	400	106	4PM45DC40	953	1861	3.0	1.31	9.5
	500	106	4PM45DC50	1204	2351	3.0	1.31	11.8
	600	106	4PM45DC60	1455	2841	4.0	1.31	14.7
	700	106	4PM45DC70	1704	3327	5.0	1.31	16.5
	800	106	4PM45DC80	1955	3817	5.0	1.31	18.6
	900	106	4PM45DC90	2204	4303	6.0	1.31	21.2
	1000	106	4PM45DC100	2455	4793	7.0	1.31	23.3
	1100	106	4PM45DC110	2706	5283	7.0	1.31	25.9
	1200	106	4PM45DC120	2955	5769	8.0	1.31	28.2
	1400	106	4PM45DC140	3455	6745	9.0	1.31	32.5
	1600	106	4PM45DC160	3957	7726	11.0	1.31	37.1
	1800	106	4PM45DC180	4457	8702	12.0	1.31	42.3
	2000	106	4PM45DC200	4957	9678	13.0	1.31	46.3
	2200	106	4PM45DC220	5458	10654	15.0	1.31	5.8
	2400	106	4PM45DC240	5958	11631	16.0	1.31	55.3
	2600	106	4PM45DC260	6458	12608	17.0	1.31	59.9
	2800	106	4PM45DC280	6959	13585	19.0	1.31	64.4
	3000	106	4PM45DC300	7459	14562	20.0	1.31	69.0

600

HEIGHT 600 mm	LENGTH	DEPTH	ITEM NO	(Btu/H) 55/45/20°C	(Btu/H) 75/65/20°C	VOLUME (l)	N-EXPONENT	WEIGHT (kg)
Type 11								
	400	50	4PM60SC40	650	1257	2.0	1.29	6.5
	500	50	4PM60SC50	821	1588	2.0	1.29	8.2
	600	50	4PM60SC60	993	1920	2.0	1.29	10.1
	700	50	4PM60SC70	1162	2248	3.0	1.29	11.2
	800	50	4PM60SC80	1334	2579	3.0	1.29	12.9
	900	50	4PM60SC90	1503	2907	4.0	1.29	14.5
	1000	50	4PM60SC100	1674	3238	4.0	1.29	16.2
	1100	50	4PM60SC110	1846	3570	5.0	1.29	17.6
	1200	50	4PM60SC120	2015	3898	5.0	1.29	19.4
	1400	50	4PM60SC140	2356	4557	6.0	1.29	22.7
	1600	50	4PM60SC160	2699	5220	7.0	1.29	25.7
	1800	50	4PM60SC180	3040	5879	7.0	1.29	29.3
	2000	50	4PM60SC200	3381	6539	8.0	1.29	32.0
	2200	50	4PM60SC220	3722	7199	9.0	1.29	35.2
	2400	50	4PM60SC240	4063	7857	10.0	1.29	38.3
	2600	50	4PM60SC260	4405	8520	11.0	1.29	41.5
	2800	50	4PM60SC280	4746	9179	11.0	1.29	44.7
	3000	50	4PM60SC300	5087	9839	12.0	1.29	47.9
Type 21								
	400	81	4PM60DPX40	944	1839	3.0	1.31	11.3
	500	81	4PM60DPX50	1193	2324	4.0	1.31	13.4
	600	81	4PM60DPX60	1442	2809	5.0	1.31	16.2
	700	81	4PM60DPX70	1688	3289	6.0	1.31	18.8
	800	81	4PM60DPX80	1937	3774	7.0	1.31	21.3
	900	81	4PM60DPX90	2183	4254	7.0	1.31	24.3

600

HEIGHT 600 mm	LENGTH	DEPTH	ITEM NO	(Btu/H) 55/45/20°C	(Btu/H) 75/65/20°C	VOLUME (l)	N-EXPONENT	WEIGHT (kg)
	1000	81	4PM60DPX100	2432	4739	8.0	1.31	26.7
	1100	81	4PM60DPX110	2681	5223	9.0	1.31	29.6
	1200	81	4PM60DPX120	2927	5703	10.0	1.31	32.3
	1400	81	4PM60DPX140	3423	6668	12.0	1.31	39.0
	1600	81	4PM60DPX160	3920	7638	13.0	1.31	43.2
	1800	81	4PM60DPX180	4415	8603	15.0	1.31	48.3
	2000	81	4PM60DPX200	4911	9568	17.0	1.31	53.9
Type 22								
	400	106	4PM60DC40	1198	2357	3.0	1.32	12.4
	500	106	4PM60DC50	1514	2978	4.0	1.32	15.8
	600	106	4PM60DC60	1830	3599	5.0	1.32	19.6
	700	106	4PM60DC70	2143	4215	6.0	1.32	21.4
	800	106	4PM60DC80	2459	4836	7.0	1.32	24.8
	900	106	4PM60DC90	2771	5451	7.0	1.32	28.5
	1000	106	4PM60DC100	3087	6072	8.0	1.32	31.8
	1100	106	4PM60DC110	3403	6693	9.0	1.32	34.9
	1200	106	4PM60DC120	3716	7309	10.0	1.32	37.8
	1400	106	4PM60DC140	4344	8545	12.0	1.32	43.6
	1600	106	4PM60DC160	4976	9787	13.0	1.32	5.9
	1800	106	4PM60DC180	5604	11024	15.0	1.32	57.1
	2000	106	4PM60DC200	6233	12260	17.0	1.32	63.1
	2200	106	4PM60DC220	6862	13496	18.0	1.32	69.5
	2400	106	4PM60DC240	7490	14733	20.0	1.32	75.8
	2600	106	4PM60DC260	8122	15975	22.0	1.32	82.2
	2800	106	4PM60DC280	8750	17212	23.0	1.32	88.5
	3000	106	4PM60DC300	9379	18448	25.0	1.32	94.8

700

HEIGHT 700 mm	LENGTH	DEPTH	ITEM NO	(Btu/H) 55/45/20°C	(Btu/H) 75/65/20°C	VOLUME (l)	N-EXPONENT	WEIGHT (kg)
Type 11								
	300	50	4PM70SC30	534	1042	1.0	1.31	5.8
	400	50	4PM70SC40	730	1426	2.0	1.31	7.6
	500	50	4PM70SC50	923	1802	2.0	1.31	9.3
	600	50	4PM70SC60	1115	2178	3.0	1.31	11.2
	700	50	4PM70SC70	1306	2550	3.0	1.31	13.5
	800	50	4PM70SC80	1499	2926	4.0	1.31	15.7
	900	50	4PM70SC90	1689	3298	4.0	1.31	16.8
	1000	50	4PM70SC100	1882	3674	5.0	1.31	18.9
	1100	50	4PM70SC110	2074	4050	5.0	1.31	2.7
	1200	50	4PM70SC120	2265	4422	6.0	1.31	22.7
	1400	50	4PM70SC140	2648	5170	7.0	1.31	26.0
	1600	50	4PM70SC160	3033	5922	8.0	1.31	29.5
	1800	50	4PM70SC180	3416	6670	9.0	1.31	33.6
	2000	50	4PM70SC200	3799	7418	10.0	1.31	38.0
	2200	50	4PM70SC220	4182	8166	11.0	1.31	41.8
	2400	50	4PM70SC240	4566	8914	12.0	1.31	45.7
	2600	50	4PM70SC260	4951	9666	13.0	1.31	49.5
	2800	50	4PM70SC280	5334	10414	14.0	1.31	53.4
	3000	50	4PM70SC300	5717	11162	15.0	1.31	57.3
Type 21								
	400	81	4PM70DPX40	1071	2097	4.0	1.31	12.7
	500	81	4PM70DPX50	1354	2650	5.0	1.31	15.8
	600	81	4PM70DPX60	1636	3202	6.0	1.31	18.6
	700	81	4PM70DPX70	1916	3749	7.0	1.31	21.8
	800	81	4PM70DPX80	2198	4302	8.0	1.31	25.1

700

HEIGHT 700 mm	LENGTH	DEPTH	ITEM NO	(Btu/H) 55/45/20°C	(Btu/H) 75/65/20°C	VOLUME (l)	N-EXPONENT	WEIGHT (kg)
	900	81	4PM70DPX90	2478	4849	9.0	1.31	28.1
	1000	81	4PM70DPX100	2760	5402	10.0	1.31	31.3
	1100	81	4PM70DPX110	3043	5955	11.0	1.31	34.5
	1200	81	4PM70DPX120	3322	6502	12.0	1.31	37.6
	1400	81	4PM70DPX140	3884	7602	14.0	1.31	43.8
	1600	81	4PM70DPX160	4449	8707	16.0	1.31	49.4
	1800	81	4PM70DPX180	5011	9807	18.0	1.31	55.5
	2000	81	4PM70DPX200	5573	10907	20.0	1.31	62.4
Type 22								
	300	106	4PM70DC30	992	1951	3.0	1.32	1.7
	400	106	4PM70DC40	1357	2670	4.0	1.32	14.7
	500	106	4PM70DC50	1715	3374	5.0	1.32	18.2
	600	106	4PM70DC60	2073	4077	6.0	1.32	21.8
	700	106	4PM70DC70	2427	4774	7.0	1.32	25.9
	800	106	4PM70DC80	2785	5478	8.0	1.32	29.3
	900	106	4PM70DC90	3139	6175	9.0	1.32	33.3
	1000	106	4PM70DC100	3496	6878	10.0	1.32	37.0
	1100	106	4PM70DC110	3854	7582	11.0	1.32	41.2
	1200	106	4PM70DC120	4208	8279	12.0	1.32	44.5
	1400	106	4PM70DC140	4920	9679	14.0	1.32	51.8
	1600	106	4PM70DC160	5636	11087	16.0	1.32	58.8
	1800	106	4PM70DC180	6348	12487	18.0	1.32	66.5
	2000	106	4PM70DC200	7059	13888	20.0	1.32	74.2
	2200	106	4PM70DC220	7771	15288	22.0	1.32	81.7
	2400	106	4PM70DC240	8483	16689	24.0	1.32	90.0
	2600	106	4PM70DC260	9199	18096	26.0	1.32	100.4

700

HEIGHT 700 mm	LENGTH	DEPTH	ITEM NO	(Btu/H) 55/45/20°C	(Btu/H) 75/65/20°C	VOLUME (l)	N-EXPONENT	WEIGHT (kg)
	2800	106	4PM70DC280	9911	19497	28.0	1.32	100.4
	3000	106	4PM70DC300	10623	20897	30.0	1.32	111.4