Data sheet
2026-10-14

Kos V

Timeless elegance

- Elegant timeless design
- Perfect solution for limited wall space
- High-quality stainless steel towel rail
- Available in various colours
- Blends into any interior

Kos V has a flat front that creates the impression of timeless elegance. The rounded, flat side panels ensure clean lines from all sides. Like tall interior furnishings, this designer radiator is not only intended to provide a sense of height, it is also a powerful heat source in areas where wall space is at a premium. The standard colour is RAL 9016 white, but many other colours and finishes are available on request. For increased functionality in the bathroom and kitchen, a stainless steel towel bar is available as an accessory. Complete with brackets, including set of screws and dowels, with mounting instructions, side covers with installation clips, 3 brass blanking plugs and air-vent.

Area of application
Kos V is ideal for both domestic and commercial heating applications, particularly in spaces where wall space is limited. It serves as a contemporary alternative to horizontal radiators and includes a sleek flat steel plate, side panels, and a top grill. Compatible with 2-pipe pumped indirect systems.

Sizing
Use a Heat Demand Calculator to determine which heat output is required from the wide range of Kos V vertical radiators.

Usage
Air vent and plug packs are provided in the packaging. To control room temperature, Thermostatic Radiator Valves can be installed. Ensure that the brackets are used for secure mounting and follow the installation instructions provided in the kit.

AMA Text
Designer radiator, Kos V, is a vertical radiator with a flat, smooth front surface and closed side covers. Available as type 21 with two heating panels and one layer of convection fins, or as type 22 with two heating panels and two layers of convection fins. Ideal for 2-pipe pumped indirect heating systems in domestic and commercial applications. Includes brackets for mounting, air vent, side covers with installation clips, 3 brass blanking plugs and air-vent. Optional stainless steel towel bar available, standard colour RAL 9016 white, with other colours available on order.

Specifications

PROPERTIES	UNIT	VALUES
ETIM Class		EC011022
Material		Steel
Type		21, 22
Surface structure		Flat smooth
Max working pressure	bar	10
Number of standard connections		4
Heat output according to recognized EN 442 laboratory		Yes
Max. Operating Temperature	°C	110
Standard color		Yes
Color		White
RAL number		9016
Grill/Cover plate		Yes
Grill/Cover plate		Yes
Gloss value		Glossy
Thread dimension (inch)		1/2 inch
Thread connection		Internal thread
With single-point connection		Yes
With air vent connection		Yes
With air valve/vent		Yes
With drain option		Yes

Documents

DOCUMENTS	DOCUMENT TYPE	LINK
Colour options	Brochure	https://asset.productmarketingcloud.com/api/assetstorage/3577_559d73e5-f4c7-4bc1-a5d1-5d81098413e7
Myson Complete Solutions - Full Brochure	Brochure	https://asset.productmarketingcloud.com/api/assetstorage/3577_8031f314-369f-4cf3-af0a-a9fc03976b1b
Myson Premium Panel & Designer Radiators	Brochure	https://asset.productmarketingcloud.com/api/assetstorage/3577_7699fabc-51e3-4ceb-9b37-139ffed451d7
Range brochure	Brochure	https://asset.productmarketingcloud.com/api/assetstorage/3577_5a942de7-8bcb-4179-a4fc-d890b5c692f3
Product Warranty	Warranty	https://asset.productmarketingcloud.com/api/assetstorage/3577_ee6ba5d6-3073-4ac1-8de0-f0c719a2c4ab
Vertical Radiator Installation Instructions	Installation	https://asset.productmarketingcloud.com/api/assetstorage/3577_ad715b96-fe81-40af-9d8a-5ceafa5c751f
Installation Manual Faro V	TechDia	https://asset.productmarketingcloud.com/api/assetstorage/3577_6a68539c-c460-4642-8d8b-056f68b79286

Resources

ProductImage - New_Kos-V main image

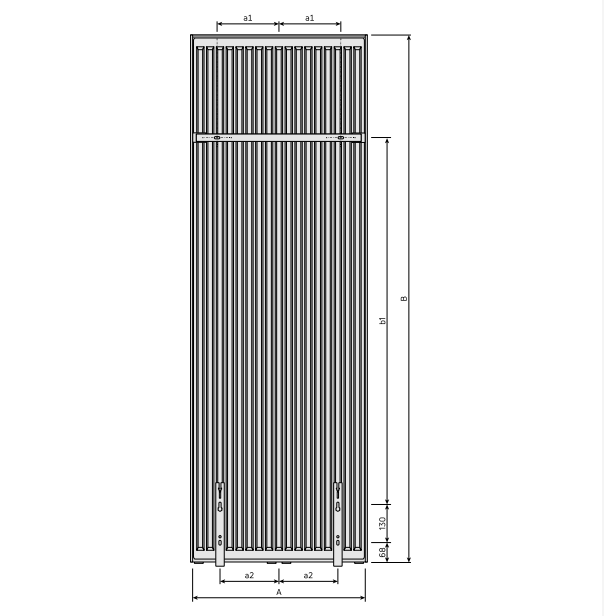

DimensionalDrawing - New_Kos V-Faro V rear view

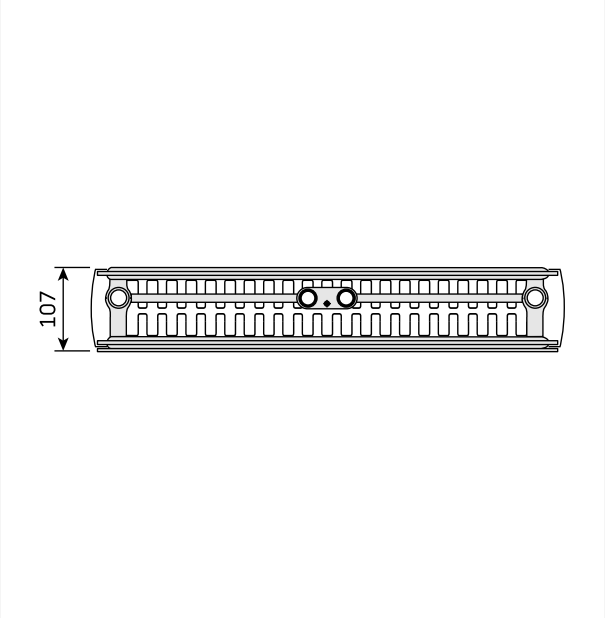

DimensionalDrawing - New_Kos V-Faro V top view

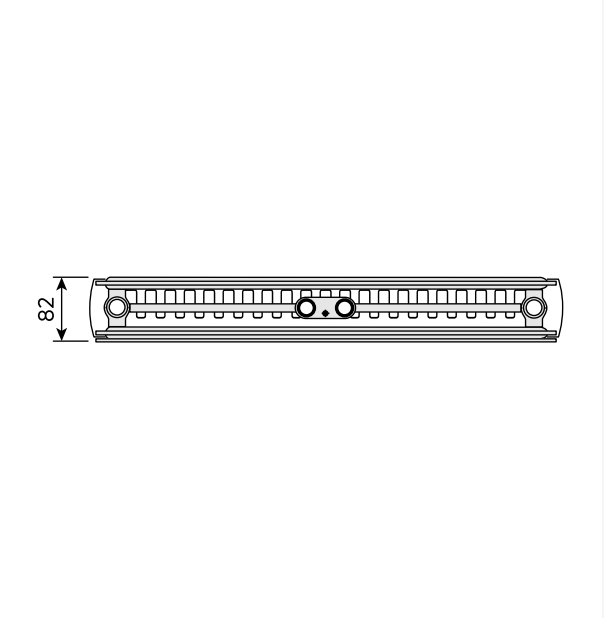

DimensionalDrawing - New_Kos V-Faro V top view

Resources

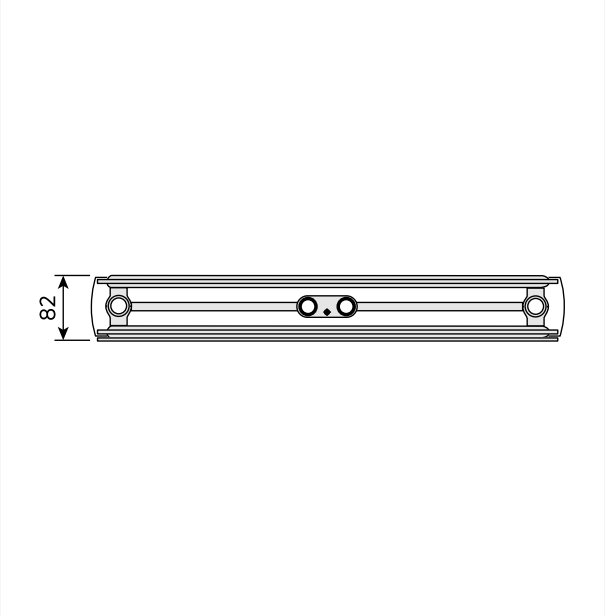

DimensionalDrawing - New_Kos V-Faro V top view

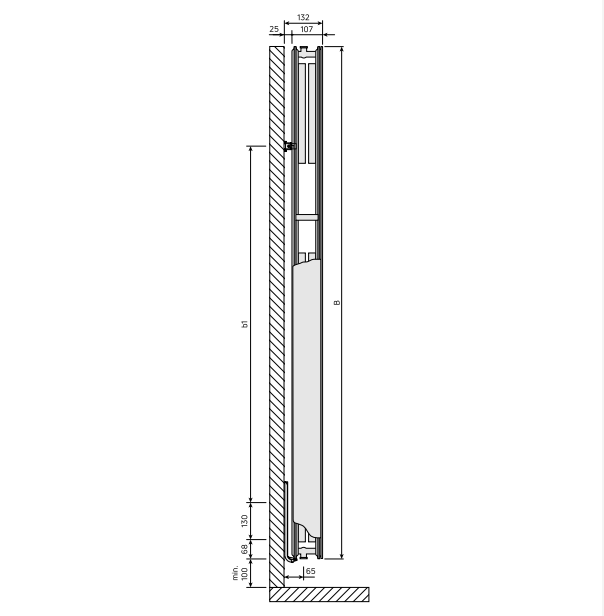

DimensionalDrawing - New_Kos V-Faro V side view

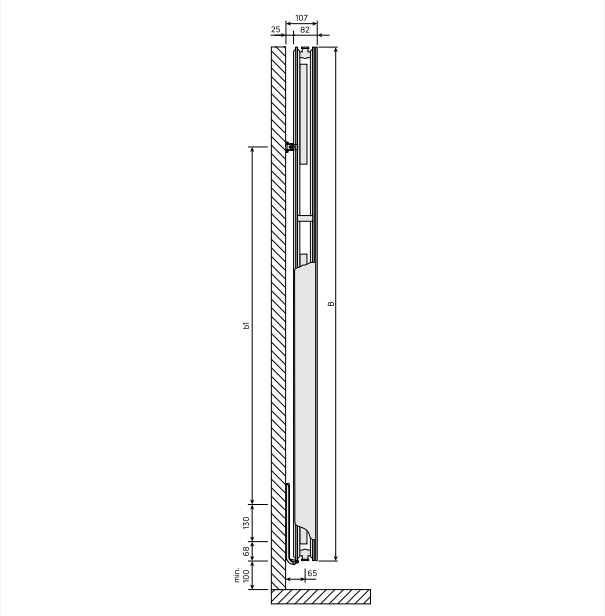

DimensionalDrawing - New_Kos V-Faro V side view

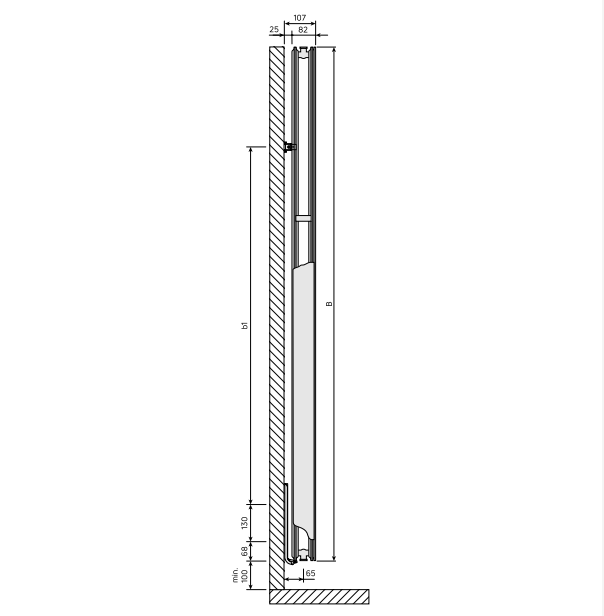

DimensionalDrawing - New_Kos V-Faro V side view

Resources

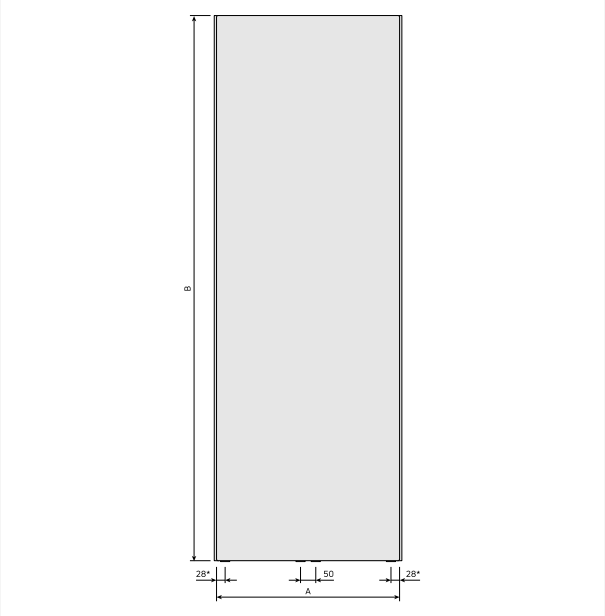

DimensionalDrawing - New Kos V front view

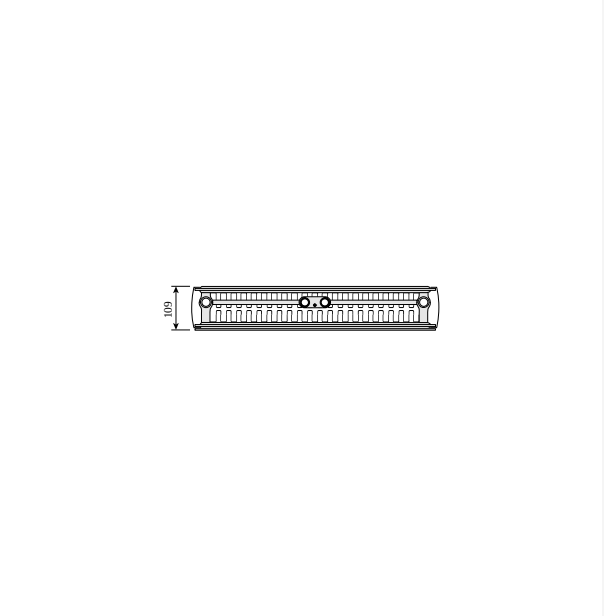

DimensionalDrawing - Kos V and Faro V, type 22, top view

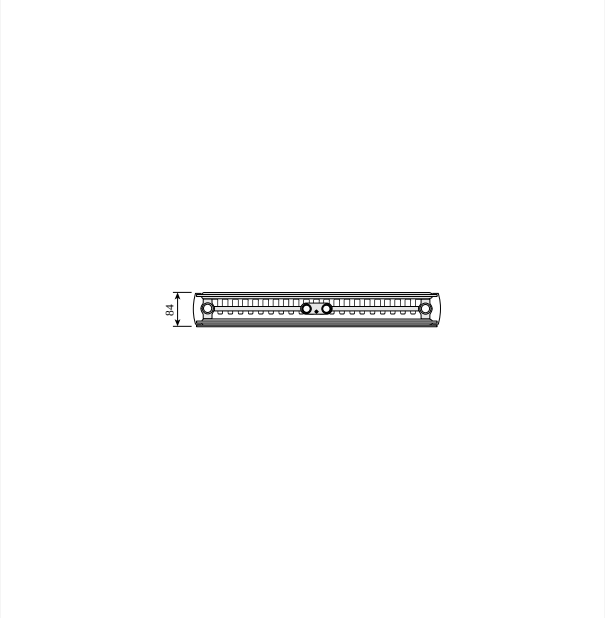

DimensionalDrawing - Kos V and Faro V, type 21, top view

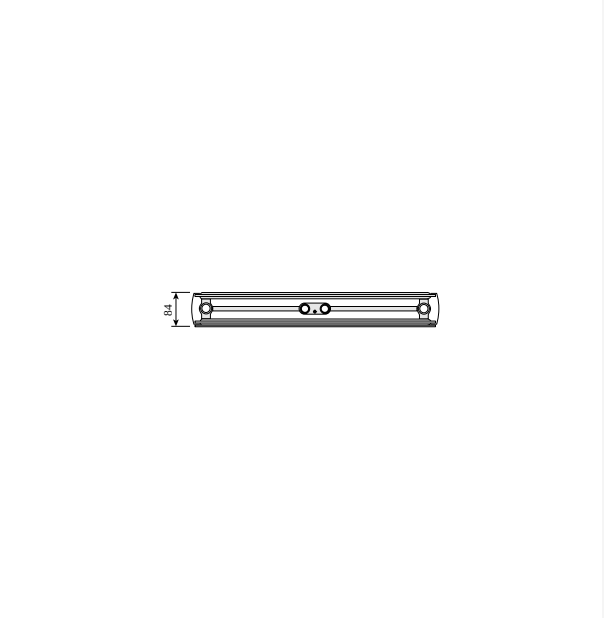

DimensionalDrawing - Kos V and Faro V type 20, top view

Resources

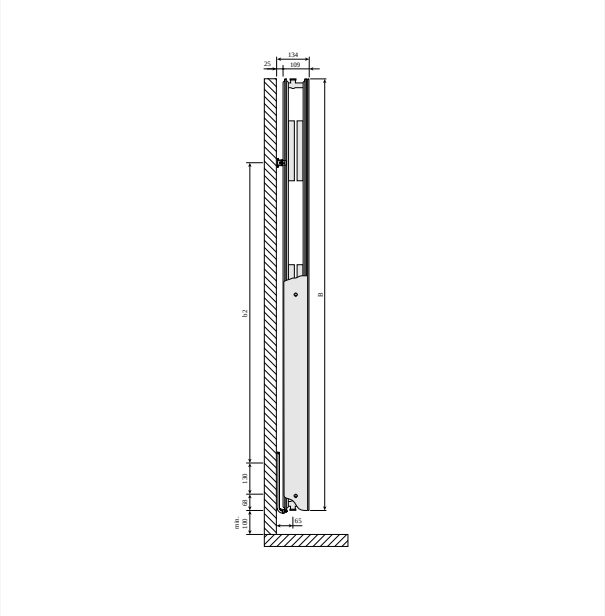

DimensionalDrawing - Kos V and Faro V type 22, side view

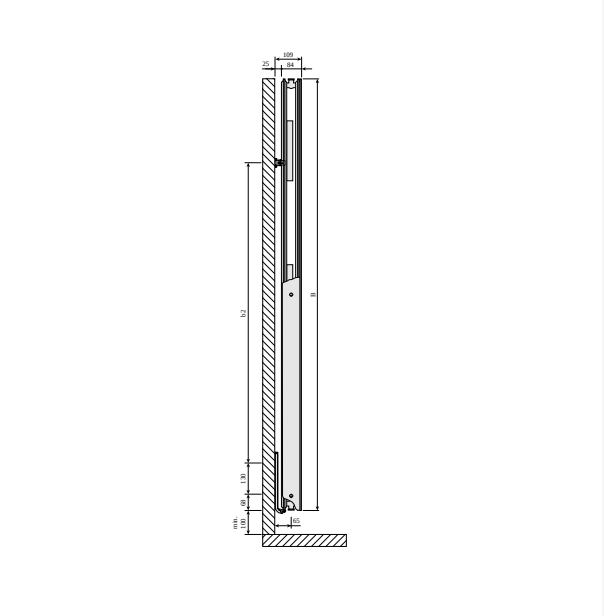

DimensionalDrawing - Kos V and Faro V type 21, side view

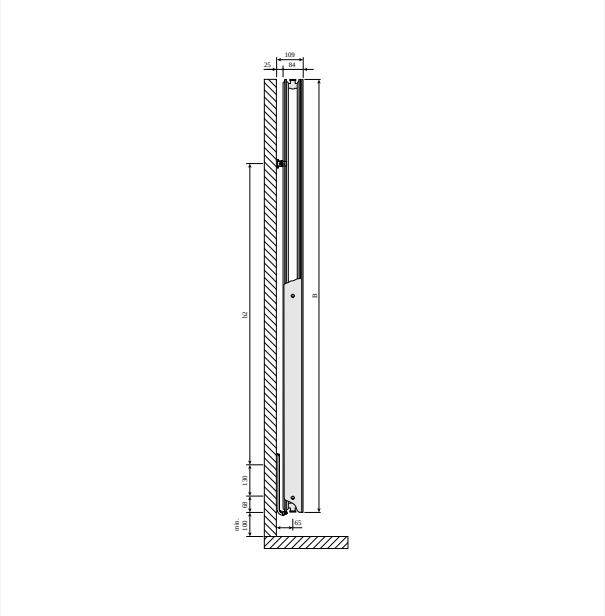

DimensionalDrawing - Kos V and Faro V type 20, side view

KOS V (mm)				
A	320	470	620	770
a1	60	135	210	285
a2	75	125	200	250

DimensionalDrawing - Kos V, Faro V - table A

Resources

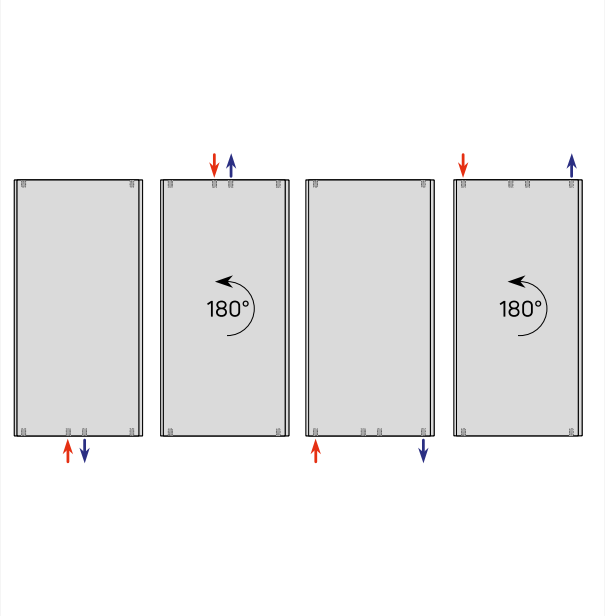

DimensionalDrawing - Verticals connection options

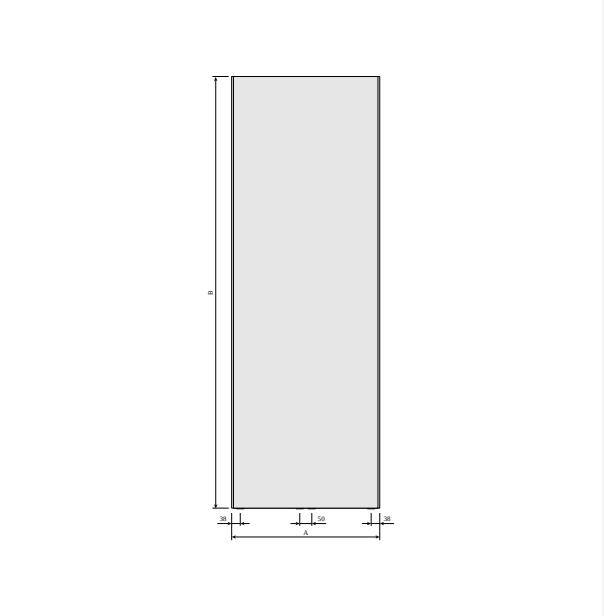

DimensionalDrawing - Kos V front view

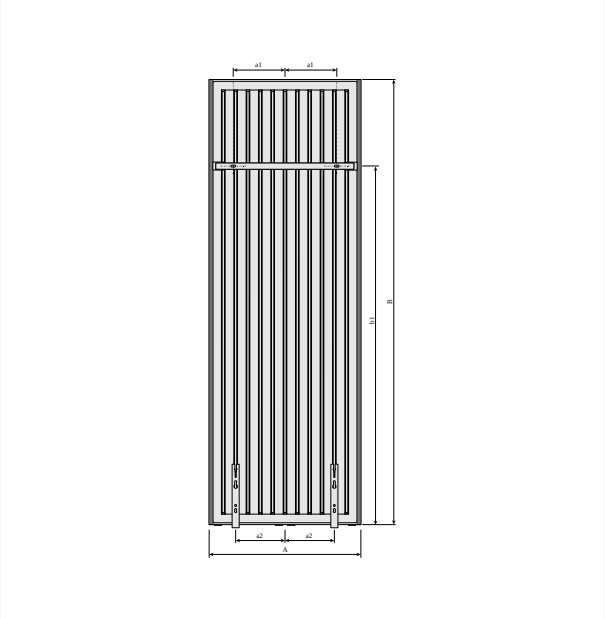

DimensionalDrawing - Kos V and Faro V with MCWV wall brackets, back view

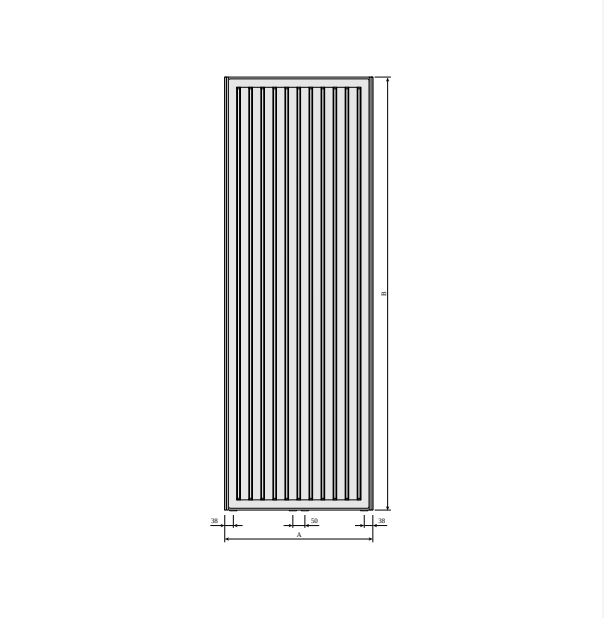

DimensionalDrawing - Kos V and Faro V back view

Resources

KOS V (mm)			
B	1800	1950	2100
b1	1450	1600	1750
b2	1252	1402	1552

DimensionalDrawing - Kos V, Faro V - table B - PL

KOS V (mm)				
B	1500	1800	1950	2100
b1	1150	1450	1600	1750
b2	952	1252	1402	1552

DimensionalDrawing - Kos V, Faro V - table B

Related products

Plan Compact

Air Vent Key (Spare)

Valve Set Vertical

1800

HEIGHT 1800 mm	LENGTH	DEPTH	ITEM NO	(Btu/H) 55/45/20°C	(Btu/H) 75/65/20°C	VOLUME (l)	N-EXPONENT	WEIGHT (kg)
Type 21								
	300	82	KOS180PX30G	1689	3258	4.8	1.29	31.7
	450	82	KOS180PX45G	2443	4739	7.2	1.30	45.8
	600	82	KOS180PX60G	3173	6183	9.7	1.31	59.9
	750	82	KOS180PX75G	3886	7602	12.1	1.31	74.0
Type 22								
	300	107	KOS180PD30G	2020	3917	4.8	1.30	35.1
	450	107	KOS180PD45G	2979	5794	7.3	1.30	50.6
	600	107	KOS180PD60G	3920	7650	9.7	1.31	66.1
	750	107	KOS180PD75G	4848	9489	12.2	1.31	79.8

1950

HEIGHT 1950 mm	LENGTH	DEPTH	ITEM NO	(Btu/H) 55/45/20°C	(Btu/H) 75/65/20°C	VOLUME (l)	N-EXPONENT	WEIGHT (kg)
Type 21								
	300	82	KOS195PX30G	1778	3439	5.2	1.29	34.1
	450	82	KOS195PX45G	2579	5002	7.8	1.30	49.3
	600	82	KOS195PX60G	3361	6527	10.4	1.30	64.4
	750	82	KOS195PX75G	4118	8022	13.0	1.31	79.6
Type 22								
	300	107	KOS195PD30G	2129	4122	5.3	1.29	37.3
	450	107	KOS195PD45G	3142	6101	7.8	1.30	53.8
	600	107	KOS195PD60G	4139	8052	10.4	1.30	70.3
	750	107	KOS195PD75G	5118	9990	13.1	1.31	85.9