Faro V

Emphasise the height of any interior.

Data sheet
2026-11-09



- Elegant contoured design
- Perfect solution for limited wall space
- Middle connection radiator
- Rotatable for connection from above
- High-quality stainless steel towel rail

The style of **Faro V** is emphasised by a finely profiled front panel and rounded side panels. Like tall interior furnishings, this designer radiator is not only intended to create a sense of height, it is also a powerful heat source in areas where wall space is at a premium. The standard colour is RAL 9016 white, but many other colours and finishes are available on request. For increased functionality in the bathroom and kitchen, a stainless steel towel bar is available as an accessory. Complete with brackets including set of screws and dowels with mounting instructions, side covers with installation clips, 3 brass blanking plugs and air-vent.

Area of application
Faro V is ideal for residential and commercial spaces where wall space is limited. It is a powerful heat source with factory-fitted steel plates, side panels, and top grill. Suitable for 2-pipe pumped indirect heating systems with 6 x ½" BSP connections.

Sizing
Use a Heat Demand Calculator to determine the required heat output from the Faro V range.

Usage
Air vent and plug packs are included in the packaging. Thermostatic Radiator Valves can be installed to control room temperature. The radiator should be securely fixed to the wall using the included brackets, screws, and dowels. For increased functionality, a stainless steel towel bar is available.

AMA Text
Designer radiator, Faro V, is a vertical radiator with a finely vertically profiled front surface and slightly curved side covers. Available as type 21 with two heating panels and one layer of convection fins or as type 22 with two heating panels and two layers of convection fins. It's a perfect solution for areas where wall space is limited, ideal for 2-pipe pumped indirect domestic and commercial heating applications with 6 x ½" BSP connections. The radiator comes in a flat steel plate design with integrated middle connections, and a variety of sizes and colours are available. Complete with air vent and plug packs, it can be paired with thermostatic radiator valves for temperature control. The package also includes brackets, screws, and dowels for secure wall installation. Accessories such as a stainless steel towel bar enhance its functionality in bathrooms and kitchens.

Specifications

PROPERTIES	UNIT	VALUES
ETIM Class		EC011022
Material		Steel
Type		21, 22
Surface structure		Flat smooth
Max working pressure	bar	10
Number of standard connections		4
Heat output according to recognized EN 442 laboratory		Yes
Max. Operating Temperature	°C	110
Standard color		Yes
Color		White
RAL number		9016
Grill/Cover plate		Yes
Grill/Cover plate		Yes
Gloss value		Glossy
Thread dimension (inch)		1/2 inch
Thread connection		Internal thread
With single-point connection		Yes
With air vent connection		Yes
With air valve/vent		Yes
With drain option		Yes

Documents

DOCUMENTS	DOCUMENT TYPE	LINK
Colour options	Brochure	https://asset.productmarketingcloud.com/api/assetstorage/3577_559d73e5-f4c7-4bc1-a5d1-5d81098413e7
Myson Complete Solutions - Full Brochure	Brochure	https://asset.productmarketingcloud.com/api/assetstorage/3577_8031f314-369f-4cf3-af0a-a9fc03976b1b
Myson Premium Panel & Designer Radiators	Brochure	https://asset.productmarketingcloud.com/api/assetstorage/3577_7699fabc-51e3-4ceb-9b37-139ffed451d7
Range brochure	Brochure	https://asset.productmarketingcloud.com/api/assetstorage/3577_5a942de7-8bcb-4179-a4fc-d890b5c692f3
Product Warranty	Warranty	https://asset.productmarketingcloud.com/api/assetstorage/3577_ee6ba5d6-3073-4ac1-8de0-f0c719a2c4ab
Vertical Radiator Installation Instructions	Installation	https://asset.productmarketingcloud.com/api/assetstorage/3577_ad715b96-fe81-40af-9d8a-5ceafa5c751f
Installation Manual Faro V	TechDia	https://asset.productmarketingcloud.com/api/assetstorage/3577_6a68539c-c460-4642-8d8b-056f68b79286

Resources



ProductImage - Vertical design radiatorn Faro V, FAV, 30 degrees, white.

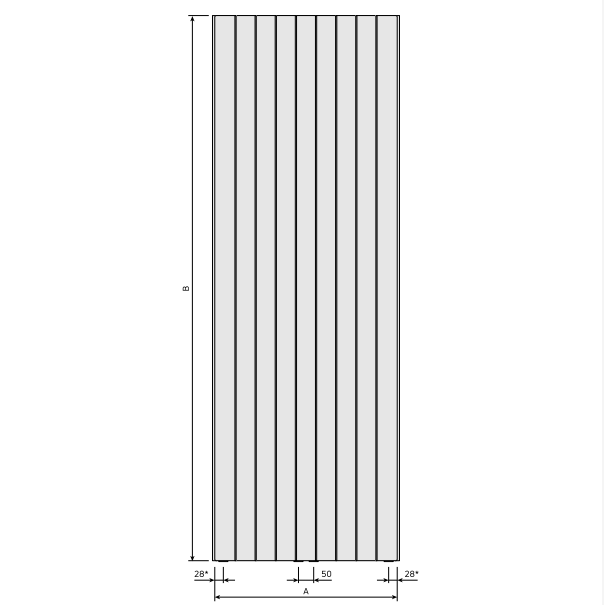

DimensionalDrawing - New_Faro V front view

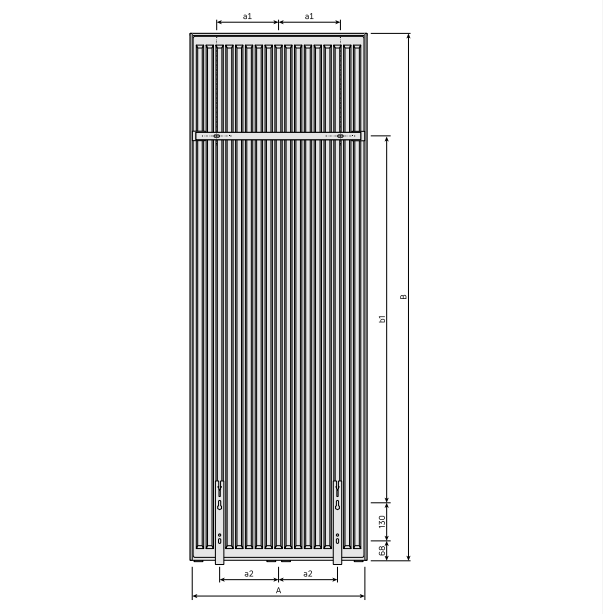

DimensionalDrawing - New_Kos V-Faro V rear view

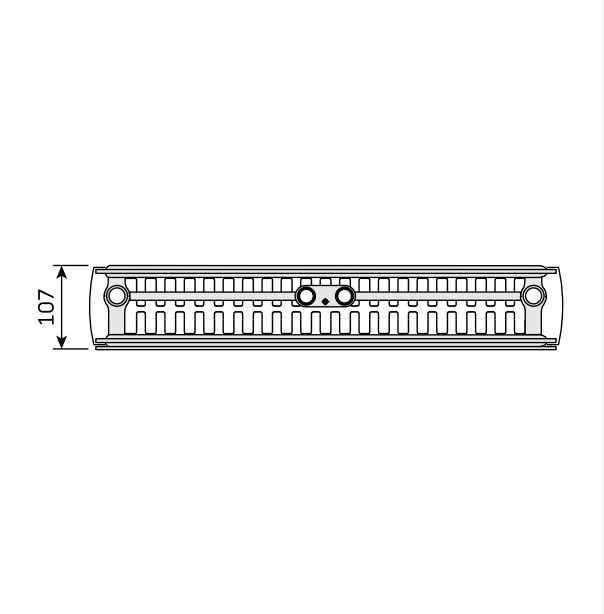

DimensionalDrawing - New_Kos V-Faro V top view

Resources

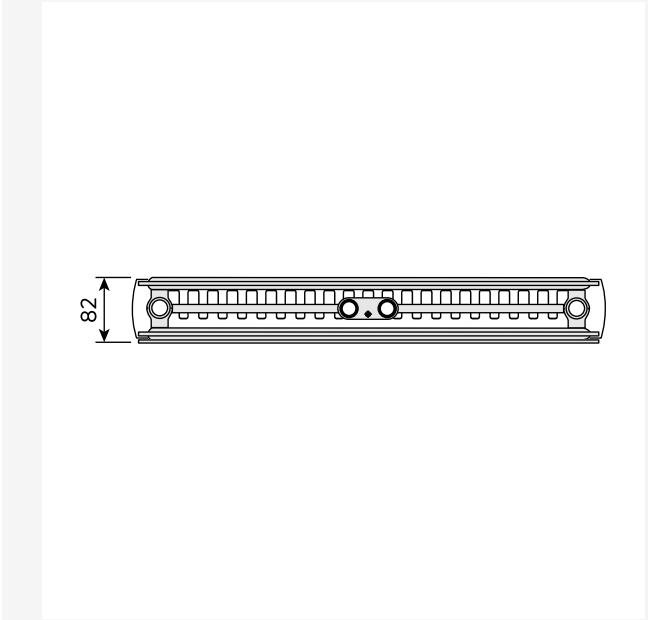

DimensionalDrawing - New_Kos V-Faro V top view

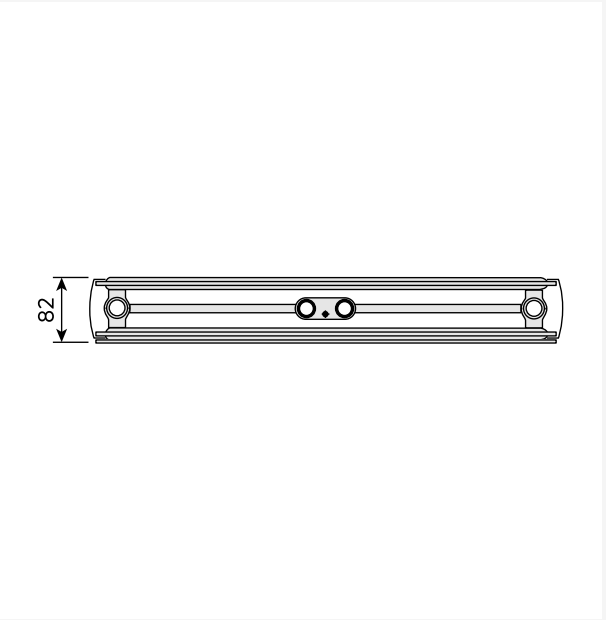

DimensionalDrawing - New_Kos V-Faro V top view

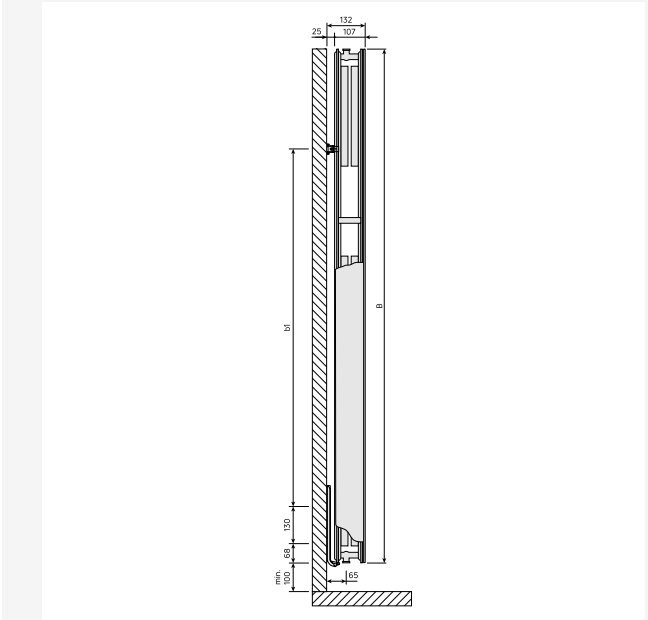

DimensionalDrawing - New_Kos V-Faro V side view

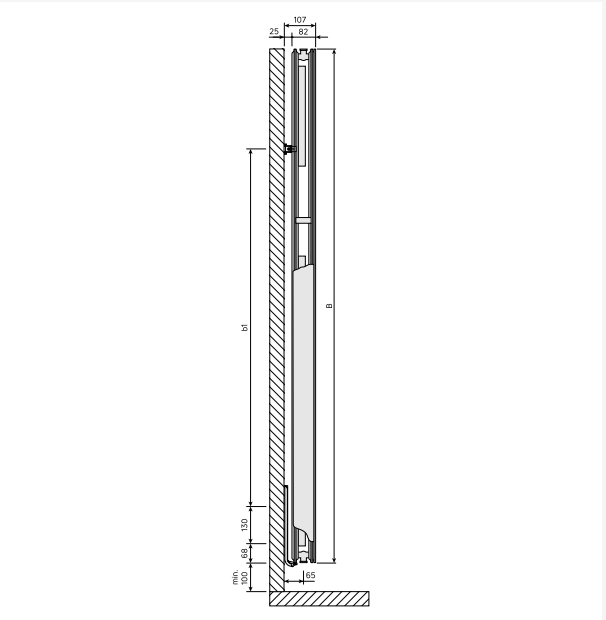

DimensionalDrawing - New_Kos V-Faro V side view

Resources

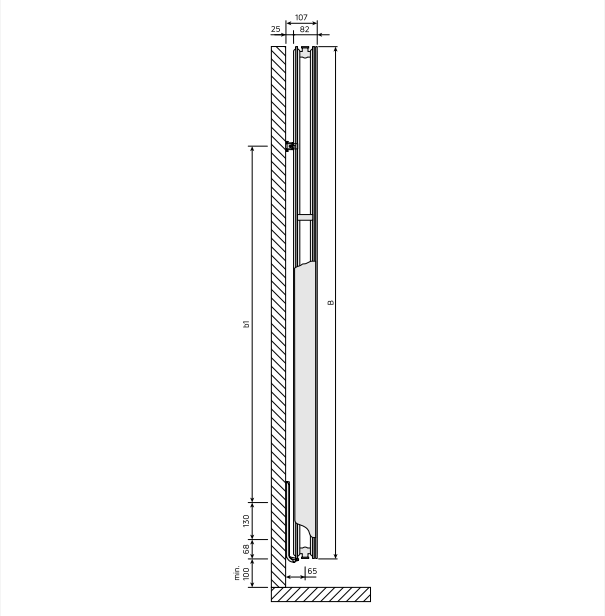

DimensionalDrawing - New_Kos V-Faro V side view

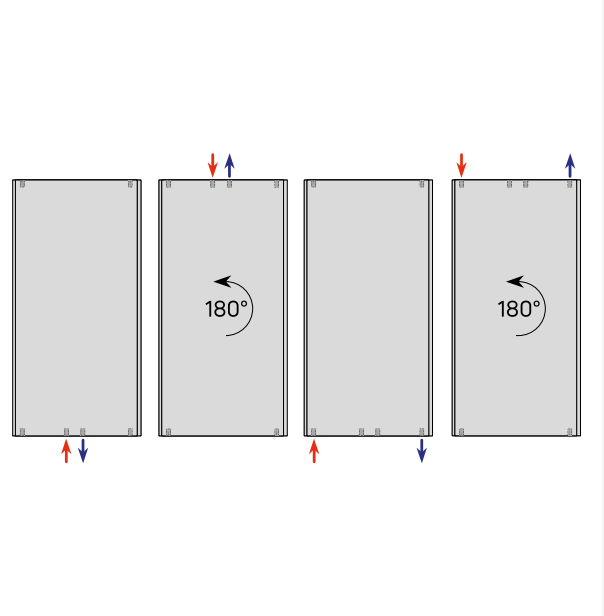

DimensionalDrawing - Verticals connection options

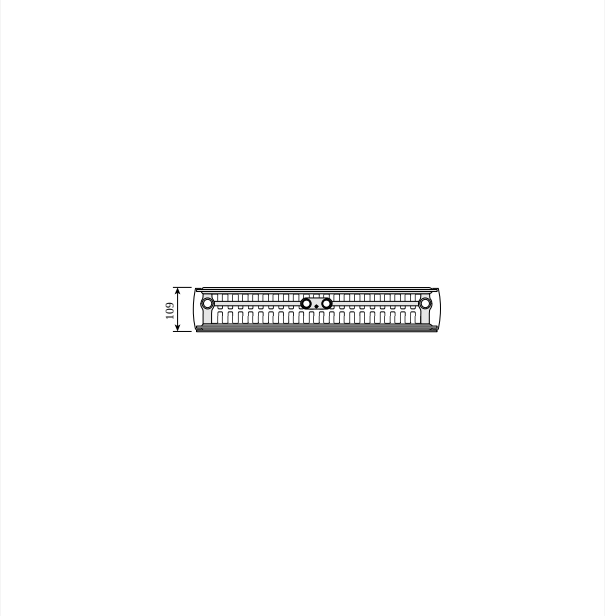

DimensionalDrawing - Kos V and Faro V, type 22, top view

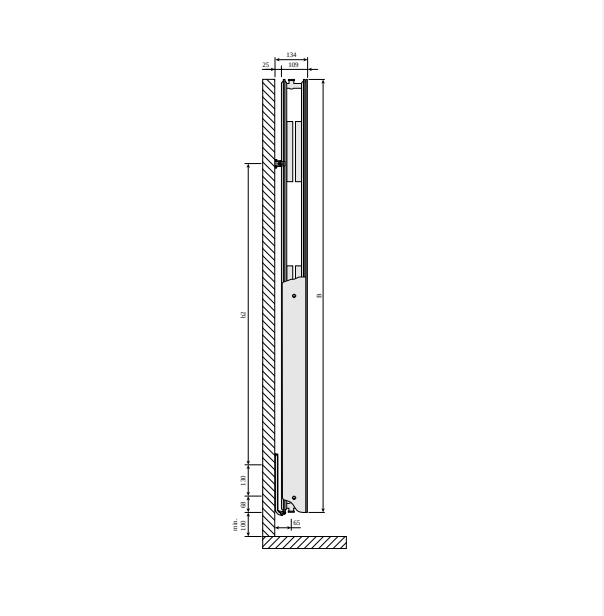

DimensionalDrawing - Kos V and Faro V type 22, side view

Resources

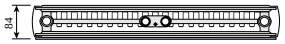

DimensionalDrawing - Kos V and Faro V, type 21, top view

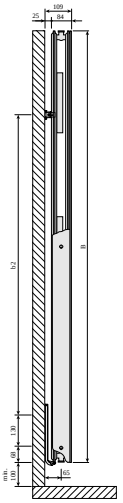

DimensionalDrawing - Kos V and Faro V type 21, side view

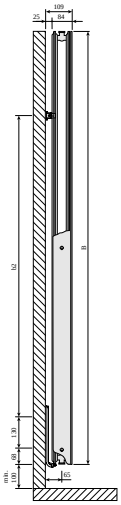

DimensionalDrawing - Kos V and Faro V type 20, side view

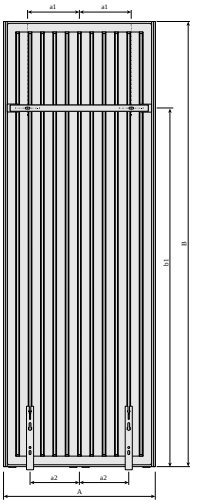

DimensionalDrawing - Kos V and Faro V with MCWV wall brackets, back view

Resources

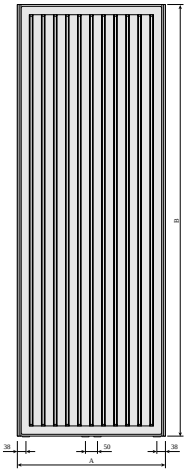

DimensionalDrawing - Kos V and Faro V back view



DimensionalDrawing - Kos V and Faro V type 20, top view

KOS V (mm)				
B	1500	1800	1950	2100
b1	1150	1450	1600	1750
b2	952	1252	1402	1552

DimensionalDrawing - Kos V, Faro V - table B

KOS V (mm)				
A	320	470	620	770
a1	60	135	210	285
a2	75	125	200	250

DimensionalDrawing - Kos V, Faro V - table A

Related products



Plan Plus Compact



Air Vent Key (Spare)



Valve Set Vertical

1800

HEIGHT 1800 mm	LENGTH	DEPTH	ITEM NO	(Btu/H) 55/45/20°C	(Btu/H) 75/65/20°C	VOLUME (l)	N-EXPONENT	WEIGHT (kg)
Type 21								
	300	82	FAR180PPX30G	1689	3258	4.8	1.29	31.7
	450	82	FAR180PPX45G	2443	4739	7.2	1.30	45.8
	600	82	FAR180PPX60G	3173	6183	9.7	1.31	59.9
	750	82	FAR180PPX75G	3886	7602	12.1	1.31	74.0
Type 22								
	300	107	FAR180PPD30G	2020	3917	4.8	1.30	35.1
	450	107	FAR180PPD45G	2979	5794	7.3	1.30	50.6
	600	107	FAR180PPD60G	3920	7650	9.7	1.31	66.1
	750	107	FAR180PPD75G	4848	9489	12.2	1.31	81.5

1950

HEIGHT 1950 mm	LENGTH	DEPTH	ITEM NO	(Btu/H) 55/45/20°C	(Btu/H) 75/65/20°C	VOLUME (l)	N-EXPONENT	WEIGHT (kg)
Type 21								
	300	82	FAR195PPX30G	1778	3439	5.2	1.29	34.1
	450	82	FAR195PPX45G	2579	5002	7.8	1.30	49.3
	600	82	FAR195PPX60G	3361	6527	10.4	1.30	64.4
	750	82	FAR195PPX75G	4118	8022	13.0	1.31	79.6
Type 22								
	300	107	FAR195PPD30G	2129	4122	5.3	1.29	37.3
	450	107	FAR195PPD45G	3142	6101	7.8	1.30	53.8
	600	107	FAR195PPD60G	4139	8052	10.4	1.30	70.3
	750	107	FAR195PPD75G	5118	9990	13.1	1.31	86.8