Duomenų lapas
2026-10-24

Ramo Ventil Compact

Stilingas plokštelinis radiatorius su dekoratyvine priekine plokšte ir apatiniu prijungimu.

- Didelis našumas
- Lankstus montavimas
- Patvari medžiaga
- Integruotas vožtuvas
- Elegantiškas dizainas

Ramo Ventil Compact yra tradicinis plokščiasis radiatorius su lygiu priekiniu paneliu, lengvais horizontaliais įspaudais ir universaliu dizainu; prieinamas RAL 9016 ir kitomis spalvomis pagal užsakymą.

Pritaikymo sritis
Ramo Ventil Compact — skirtas uždaroms vandens sistemoms. Aukštis 200–900 mm, ilgis iki 3000 mm, 2 vamzdžių konfigūracija.

Matmenų parinkimas
Norint užtikrinti teisingą produktų pasirinkimą, prašome naudoti mūsų skaičiavimo įrankius ir produktų bukletus. Jei reikia pagalbos, susisiekite su mūsų pardavimo komanda.

Naudojimas
Ramo Ventil Compact montuok pagal pateiktas instrukcijas, naudojant komplekte esančius sieninius laikiklius; prijunk prie centrinio šildymo sistemos su integruotais vožtuvais, prieš pirmą paleidimą pripildyk ir nuorink radiatorių, kad išvengtum oro kišenių; kasdienė priežiūra apima vožtuvų tikrinimą ir periodinį nuorinimą.

AMA tekstas
Ramo Ventil Compact radiatoriussu lygiu paviršiumi ir horizontaliomis linijomis, su šoniniais ir apatiniais prijungimais (4×G 1/2" šonuose, 2×G 1/2" apačioje). Apatinis prijungimas užtikrina paslėptą vamzdyną. Su reguliuojamu vožtuvo įdėklu. Komplekte tvirtinimai, kamščiai, nuorinimo vožtuvas. RAL 9016; kiti tonai pagal pageidavimą. Garantija 10 metų.

Specifikacijos

SAVYBĖS	VIENETAS	REIKŠMĖS
ETIM klasė		EC011022
Medžiaga		Plienas
Tipas		11, 21, 22, 33
Paviršiaus struktūra		Lygus sklandus
Maks. darbinis slėgis	bar	10
Standartinių jungčių skaičius		2
Šilumos atidavimas pagal pripažintą EN 442 laboratoriją		Taip
Maksimali veikimo temperatūra	°C	110
Standartinė spalva		Taip
Spalva		Baltas
RAL numeris		9016
Grotelės/Dangtelių plokštė		Taip
Grotelės/Dangtelių plokštė		Taip
Blizgesio vertė		Blizgus
Srieginis matmuo (coliai)		1/2 colio
Jungties sriegis		Vidinis sriegis
Su vieno taško jungtimi		Taip
Su oro išleidimo jungtimi		Taip
Su oro išleidimo vožtuvu/nuorintuvu		Taip
Su išleidimo galimybe		Taip

Ištekliai

ProductImage - Panel radiator Ramo Ventil Compact, RCV.

RAMO VENTIL COMPACT (mm)		
	RCV11	
A	a1	a2
400-1600	117	-
1800	117	917
2000	117	1017
2300	117	1150
2600	117	1317
3000	117	1517

DimensionalDrawing - Ramo Ventil Compact, lentelės brėžinys A

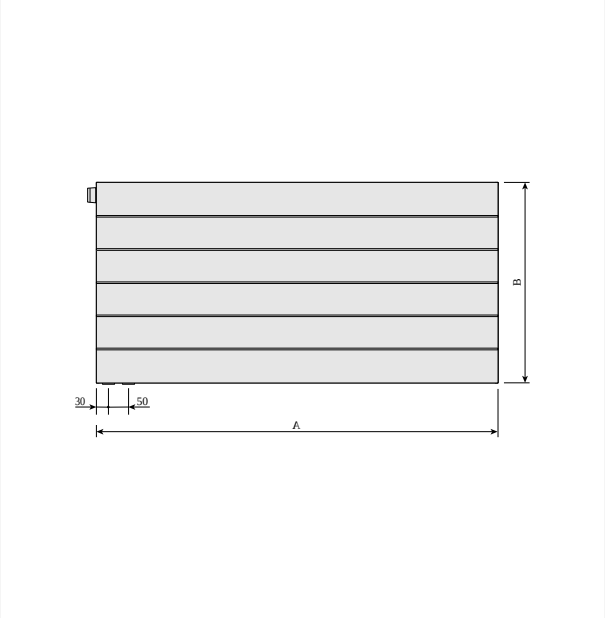

DimensionalDrawing - Ramo Ventil Compact, kairė, vaizdas iš priekio

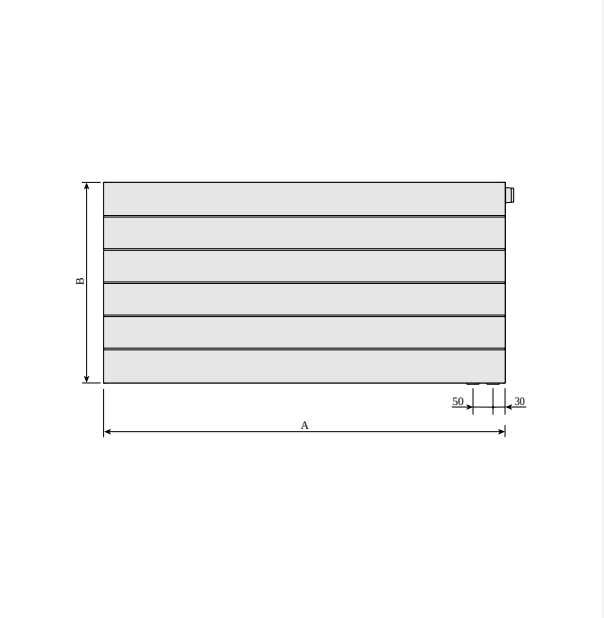

DimensionalDrawing - Ramo Ventil Compact, dešinė, vaizdas iš priekio

Ištekliai

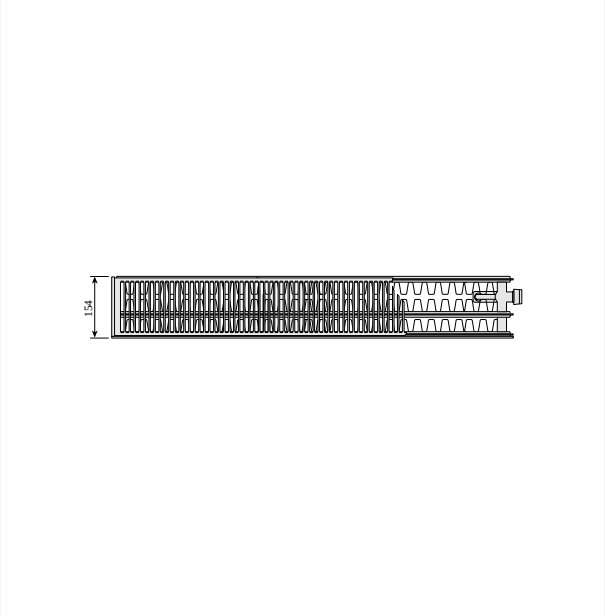

DimensionalDrawing - Plan Ventil Compact ir Ramo Ventil Compact, tipas 33, dešinė, vaizdas iš viršaus

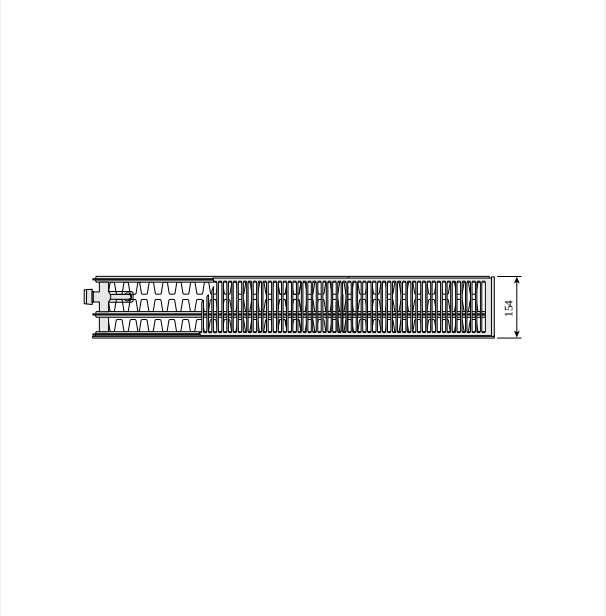

DimensionalDrawing - Plan Ventil Compact ir Ramo Ventil Compact, tipas 33, kairė, vaizdas iš viršaus

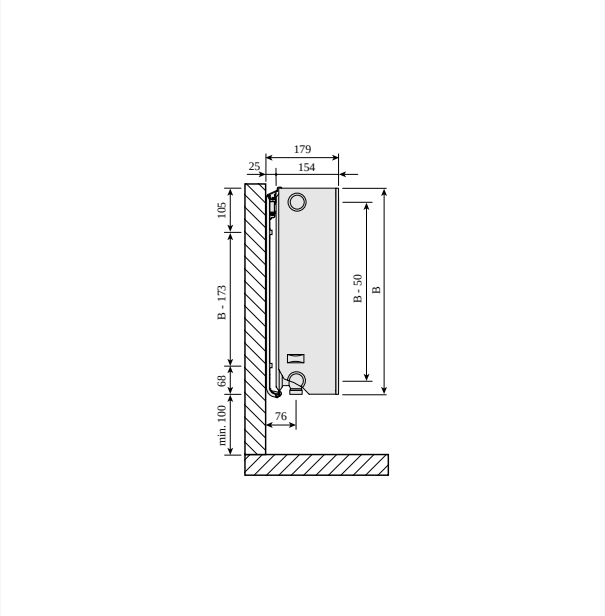

DimensionalDrawing - Plan Ventil Compact ir Ramo Ventil Compact, tipai 30–33, vaizdas iš šono

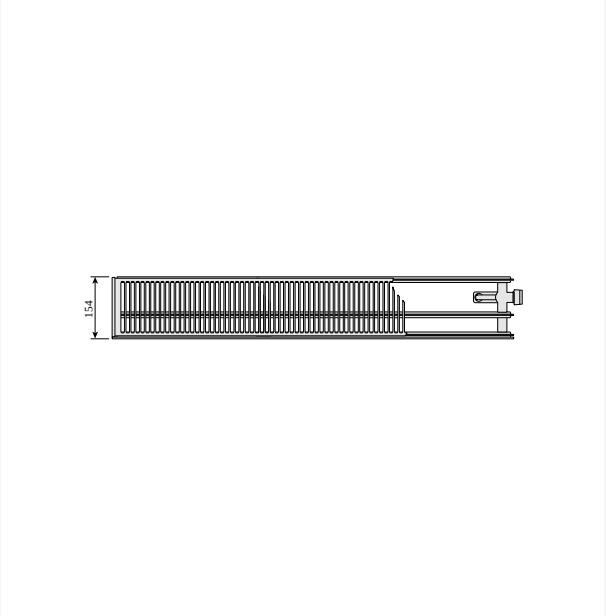

DimensionalDrawing - Plan Ventil Compact ir Ramo Ventil Compact, tipas 30, dešinė, vaizdas iš viršaus

Ištekliai

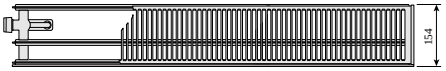

DimensionalDrawing - Plan Ventil Compact ir Ramo Ventil Compact, tipas 30, kairė, vaizdas iš viršaus

DimensionalDrawing - Plan Ventil Compact ir Ramo Ventil Compact, tipas 22, dešinė, vaizdas iš viršaus

DimensionalDrawing - Plan Ventil Compact ir Ramo Ventil Compact, tipas 22, kairė, vaizdas iš viršaus

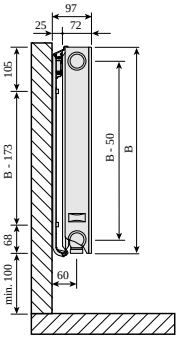

DimensionalDrawing - Plan Ventil Compact ir Ramo Ventil Compact, tipas 21s, vaizdas iš šono

Ištekliai

DimensionalDrawing - Plan Ventil Compact ir Ramo Ventil Compact, tipas 21s, dešinė, vaizdas iš viršaus

DimensionalDrawing - Plan Ventil Compact ir Ramo Ventil Compact, tipas 21s, kairė, vaizdas iš viršaus

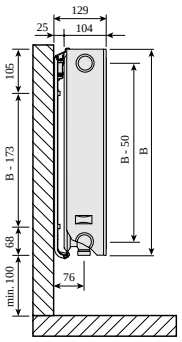

DimensionalDrawing - Plan Ventil Compact ir Ramo Ventil Compact, tipai 20–22, vaizdas iš šono

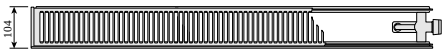

DimensionalDrawing - Plan Ventil Compact ir Ramo Ventil Compact, tipas 20, dešinė, vaizdas iš viršaus

Ištekliai

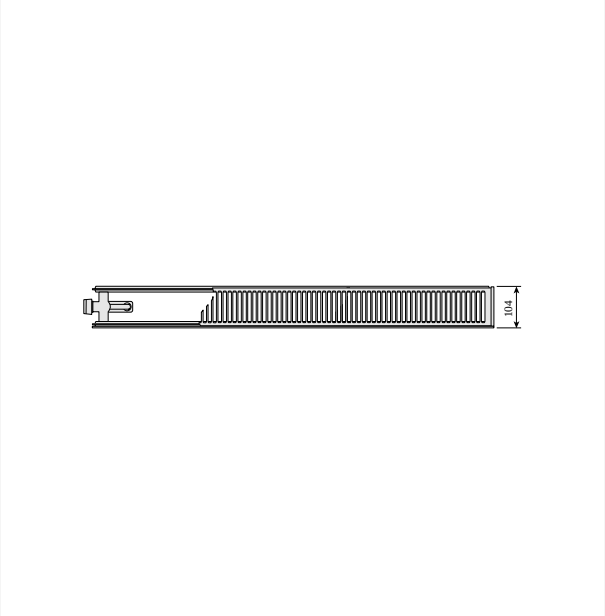

DimensionalDrawing - Plan Ventil Compact ir Ramo Ventil Compact, tipas 20, kairė, vaizdas iš viršaus

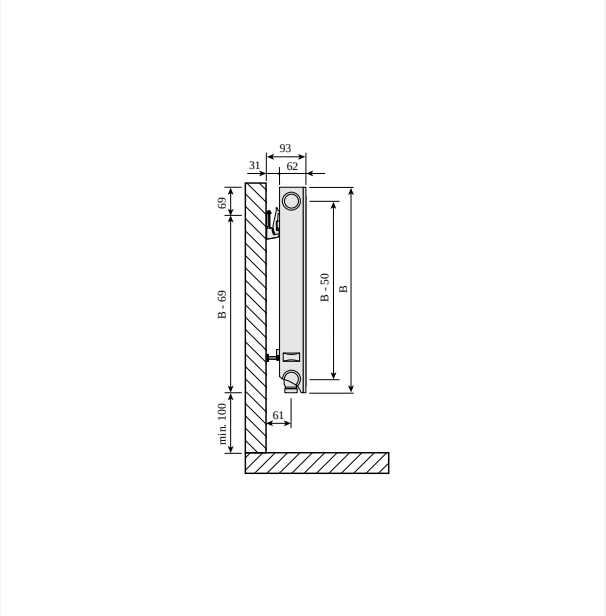

DimensionalDrawing - Plan Ventil Compact ir Ramo Ventil Compact, tipas 11, vaizdas iš šono

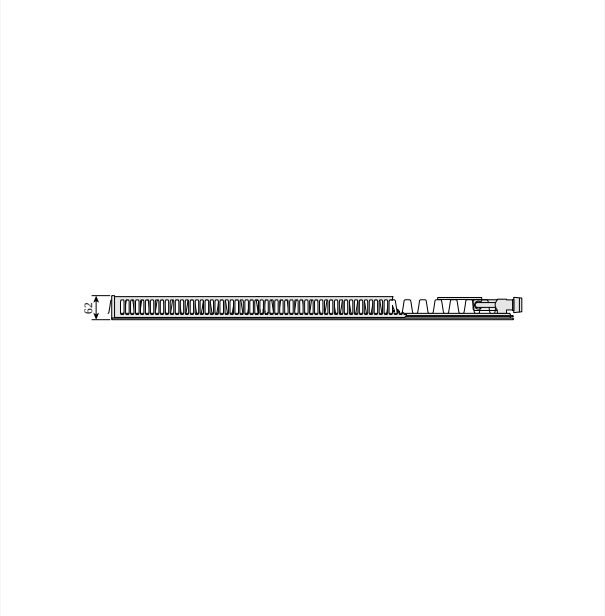

DimensionalDrawing - Plan Ventil Compact ir Ramo Ventil Compact, tipas 11, dešinė, vaizdas iš viršaus

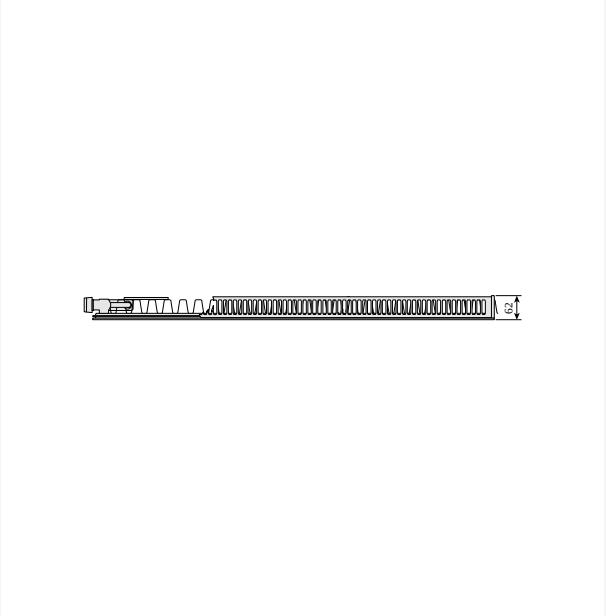

DimensionalDrawing - Plan Ventil Compact ir Ramo Ventil Compact, tipas 11, kairė, vaizdas iš viršaus

300

AUKŠTIS 300 mm	ILGIS	GYLIS			Galia (W) 45/35/20°C	Galia (W) 55/45/20°C	Galia (W) 60/45/20°C	TŪRIS (l)	N-eksponentas	SVORIS (kg)
Tipas 11										
	400	62	F0G1103004010310	F0G1103004010300	64	110	119	0.7	1.28	5.6
	500	62	F0G1103005010310	F0G1103005010300	80	137	149	0.8	1.28	6.7
	600	62	F0G1103006010310	F0G1103006010300	95	165	178	1.0	1.28	7.7
	700	62	F0G1103007010310	F0G1103007010300	111	192	208	1.2	1.28	8.8
	800	62	F0G1103008010310	F0G1103008010300	127	220	238	1.4	1.28	10.2
	900	62	F0G1103009010310	F0G1103009010300	143	247	268	1.5	1.28	1.9
	1000	62	F0G1103010010310	F0G1103010010300	159	275	297	1.7	1.28	11.9
	1100	62	F0G1103011010310	F0G1103011010300	175	302	327	1.9	1.28	13.1
	1200	62	F0G1103012010310	F0G1103012010300	191	330	357	2.0	1.28	14.6
	1400	62	F0G1103014010310	F0G1103014010300	223	385	416	2.4	1.28	16.2
	1600	62	F0G1103016010310	F0G1103016010300	254	440	476	2.7	1.28	18.3
	1800	62	F0G1103018010310	F0G1103018010300	286	495	535	3.1	1.28	2.4
	2000	62	F0G1103020010310	F0G1103020010300	318	550	595	3.4	1.28	22.5
	2300	62	F0G1103023010310	F0G1103023010300	366	632	684	3.9	1.28	25.8
	2600	62	F0G1103026010310	F0G1103026010300	413	715	773	4.4	1.28	28.9
	3000	62	F0G1103030010310	F0G1103030010300	477	824	892	5.1	1.28	33.1
Tipas 21										
	400	72	F0G2103004011310	F0G2103004011300	88	152	165	1.4	1.28	7.6
	500	72	F0G2103005011310	F0G2103005011300	110	190	206	1.7	1.28	9.2
	600	72	F0G2103006011310	F0G2103006011300	132	229	247	2.0	1.28	1.7
	700	72	F0G2103007011310	F0G2103007011300	155	267	289	2.4	1.28	12.2
	800	72	F0G2103008011310	F0G2103008011300	177	305	330	2.7	1.28	14.2
	900	72	F0G2103009011310	F0G2103009011300	199	343	371	3.1	1.28	15.2
	1000	72	F0G2103010011310	F0G2103010011300	221	381	412	3.4	1.28	16.7

300

AUKŠTIS 300 mm	ILGIS	GYLIS			Galia (W) 45/35/20°C	Galia (W) 55/45/20°C	Galia (W) 60/45/20°C	TŪRIS (l)	N-eksponentas	SVORIS (kg)
	1100	72	F0G2103011011310	F0G2103011011300	243	419	453	3.7	1.28	18.2
	1200	72	F0G2103012011310	F0G2103012011300	265	457	495	4.1	1.28	19.7
	1400	72	F0G2103014011310	F0G2103014011300	309	533	577	4.8	1.28	22.7
	1600	72	F0G2103016011310	F0G2103016011300	353	610	660	5.4	1.28	25.8
	1800	72	F0G2103018011310	F0G2103018011300	397	686	742	6.1	1.28	28.8
	2000	72	F0G2103020011310	F0G2103020011300	442	762	824	6.8	1.28	31.8
	2300	72	F0G2103023011310	F0G2103023011300	508	876	948	7.8	1.28	36.3
	2600	72	F0G2103026011310	F0G2103026011300	574	990	1072	8.8	1.28	4.9
	3000	72	F0G2103030011310	F0G2103030011300	662	1143	1237	10.2	1.28	46.9
Tipas 22										
	400	104	F0G2203004011310	F0G2203004011300	111	193	209	1.4	1.30	8.6
	500	104	F0G2203005011310	F0G2203005011300	138	241	261	1.7	1.30	1.2
	600	104	F0G2203006011310	F0G2203006011300	166	289	314	2.0	1.30	11.9
	700	104	F0G2203007011310	F0G2203007011300	194	338	366	2.4	1.30	13.6
	800	104	F0G2203008011310	F0G2203008011300	222	386	418	2.7	1.30	15.2
	900	104	F0G2203009011310	F0G2203009011300	249	434	470	3.1	1.30	16.9
	1000	104	F0G2203010011310	F0G2203010011300	277	482	523	3.4	1.30	18.5
	1100	104	F0G2203011011310	F0G2203011011300	305	531	575	3.7	1.30	21.0
	1200	104	F0G2203012011310	F0G2203012011300	332	579	627	4.1	1.30	21.9
	1400	104	F0G2203014011310	F0G2203014011300	388	675	732	4.8	1.30	25.2
	1600	104	F0G2203016011310	F0G2203016011300	443	772	836	5.4	1.30	28.5
	1800	104	F0G2203018011310	F0G2203018011300	499	868	941	6.1	1.30	31.8
	2000	104	F0G2203020011310	F0G2203020011300	554	965	1045	6.8	1.30	35.1
	2300	104	F0G2203023011310	F0G2203023011300	637	1109	1202	7.8	1.30	4.1
	2600	104	F0G2203026011310	F0G2203026011300	720	1254	1359	8.8	1.30	45.1
	3000	104	F0G2203030011310	F0G2203030011300	831	1447	1568	10.2	1.30	51.8

300

AUKŠTIS 300 mm	ILGIS	GYLIS			Galia (W) 45/35/20°C	Galia (W) 55/45/20°C	Galia (W) 60/45/20°C	TŪRIS (l)	N-eksponentas	SVORIS (kg)
Tipas 33										
	400	154	F0G3303004011310	F0G3303004011300	153	268	291	2.0	1.32	11.7
	500	154	F0G3303005011310	F0G3303005011300	191	335	364	2.5	1.32	14.5
	600	154	F0G3303006011310	F0G3303006011300	230	403	437	3.1	1.32	16.4
	700	154	F0G3303007011310	F0G3303007011300	268	470	509	3.6	1.32	18.8
	800	154	F0G3303008011310	F0G3303008011300	306	537	582	4.1	1.32	21.2
	900	154	F0G3303009011310	F0G3303009011300	344	604	655	4.6	1.32	23.5
	1000	154	F0G3303010011310	F0G3303010011300	383	671	728	5.1	1.32	25.9
	1100	154	F0G3303011011310	F0G3303011011300	421	738	800	5.6	1.32	28.3
	1200	154	F0G3303012011310	F0G3303012011300	459	805	873	6.1	1.32	3.6
	1400	154	F0G3303014011310	F0G3303014011300	536	939	1019	7.1	1.32	35.4
	1600	154	F0G3303016011310	F0G3303016011300	612	1073	1164	8.2	1.32	4.1
	1800	154	F0G3303018011310	F0G3303018011300	689	1208	1310	9.2	1.32	44.9
	2000	154	F0G3303020011310	F0G3303020011300	765	1342	1455	10.2	1.32	49.6
	2300	154	F0G3303023011310	F0G3303023011300	880	1543	1674	11.7	1.32	56.8
	2600	154	F0G3303026011310	F0G3303026011300	995	1744	1892	13.3	1.32	63.8
	3000	154	F0G3303030011310	F0G3303030011300	1148	2013	2183	15.3	1.32	73.3

400

AUKŠTIS 400 mm	ILGIS	GYLIS			Galia (W) 45/35/20°C	Galia (W) 55/45/20°C	Galia (W) 60/45/20°C	TŪRIS (l)	N-eksponentas	SVORIS (kg)
Tipas 11										
	400	62	F0G1104004010310	F0G1104004010300	82	141	153	0.9	1.28	7.4
	500	62	F0G1104005010310	F0G1104005010300	102	177	191	1.1	1.28	8.5
	600	62	F0G1104006010310	F0G1104006010300	123	212	229	1.3	1.28	10.4
	700	62	F0G1104007010310	F0G1104007010300	143	247	268	1.5	1.28	11.4
	800	62	F0G1104008010310	F0G1104008010300	163	283	306	1.8	1.28	12.8
	900	62	F0G1104009010310	F0G1104009010300	184	318	344	2.0	1.28	14.3
	1000	62	F0G1104010010310	F0G1104010010300	204	353	382	2.2	1.28	15.7
	1100	62	F0G1104011010310	F0G1104011010300	225	389	421	2.4	1.28	17.1
	1200	62	F0G1104012010310	F0G1104012010300	245	424	459	2.6	1.28	18.6
	1400	62	F0G1104014010310	F0G1104014010300	286	494	535	3.1	1.28	21.4
	1600	62	F0G1104016010310	F0G1104016010300	327	565	612	3.5	1.28	24.3
	1800	62	F0G1104018010310	F0G1104018010300	368	636	688	4.0	1.28	27.2
	2000	62	F0G1104020010310	F0G1104020010300	409	706	765	4.4	1.28	3.2
	2300	62	F0G1104023010310	F0G1104023010300	470	812	879	5.1	1.28	34.3
	2600	62	F0G1104026010310	F0G1104026010300	531	918	994	5.7	1.28	38.6
	3000	62	F0G1104030010310	F0G1104030010300	613	1060	1147	6.6	1.28	44.4
Tipas 21										
	400	72	F0G2104004011310	F0G2104004011300	111	193	209	1.8	1.28	10.4
	500	72	F0G2104005011310	F0G2104005011300	139	241	261	2.3	1.28	12.0
	600	72	F0G2104006011310	F0G2104006011300	167	289	313	2.7	1.28	14.0
	700	72	F0G2104007011310	F0G2104007011300	195	337	365	3.1	1.28	16.0
	800	72	F0G2104008011310	F0G2104008011300	223	386	417	3.6	1.28	18.0
	900	72	F0G2104009011310	F0G2104009011300	251	434	470	4.0	1.28	20.0
	1000	72	F0G2104010011310	F0G2104010011300	279	482	522	4.5	1.28	22.0
	1100	72	F0G2104011011310	F0G2104011011300	306	530	574	5.0	1.28	24.0

400

AUKŠTIS 400 mm	ILGIS	GYLIS			Galia (W) 45/35/20°C	Galia (W) 55/45/20°C	Galia (W) 60/45/20°C	TŪRIS (l)	N-eksponentas	SVORIS (kg)
	1200	72	F0G2104012011310	F0G2104012011300	334	578	626	5.4	1.28	26.0
	1400	72	F0G2104014011310	F0G2104014011300	390	675	730	6.3	1.28	30.0
	1600	72	F0G2104016011310	F0G2104016011300	446	771	835	7.2	1.28	34.0
	1800	72	F0G2104018011310	F0G2104018011300	501	868	939	8.1	1.28	38.3
	2000	72	F0G2104020011310	F0G2104020011300	557	964	1044	9.0	1.28	42.5
	2300	72	F0G2104023011310	F0G2104023011300	641	1109	1200	10.3	1.28	48.8
	2600	72	F0G2104026011310	F0G2104026011300	724	1253	1357	11.7	1.28	54.2
	3000	72	F0G2104030011310	F0G2104030011300	836	1446	1565	13.5	1.28	62.3
Tipas 22										
	400	104	F0G2204004011310	F0G2204004011300	140	245	266	1.8	1.31	11.5
	500	104	F0G2204005011310	F0G2204005011300	175	307	333	2.3	1.31	13.4
	600	104	F0G2204006011310	F0G2204006011300	211	368	399	2.7	1.31	15.6
	700	104	F0G2204007011310	F0G2204007011300	246	430	466	3.1	1.31	17.9
	800	104	F0G2204008011310	F0G2204008011300	281	491	532	3.6	1.31	2.2
	900	104	F0G2204009011310	F0G2204009011300	316	552	599	4.0	1.31	22.4
	1000	104	F0G2204010011310	F0G2204010011300	351	614	665	4.5	1.31	24.7
	1100	104	F0G2204011011310	F0G2204011011300	386	675	732	5.0	1.31	27.0
	1200	104	F0G2204012011310	F0G2204012011300	421	736	798	5.4	1.31	29.2
	1400	104	F0G2204014011310	F0G2204014011300	491	859	931	6.3	1.31	33.8
	1600	104	F0G2204016011310	F0G2204016011300	561	982	1064	7.2	1.31	38.3
	1800	104	F0G2204018011310	F0G2204018011300	632	1104	1197	8.1	1.31	42.8
	2000	104	F0G2204020011310	F0G2204020011300	702	1227	1331	9.0	1.31	47.4
	2300	104	F0G2204023011310	F0G2204023011300	807	1411	1530	10.3	1.31	54.2
	2600	104	F0G2204026011310	F0G2204026011300	912	1595	1730	11.7	1.31	7.0
	3000	104	F0G2204030011310	F0G2204030011300	1053	1841	1996	13.5	1.31	7.5
Tipas 33										

400

AUKŠTIS 400 mm	ILGIS	GYLIS			Galia (W) 45/35/20°C	Galia (W) 55/45/20°C	Galia (W) 60/45/20°C	TŪRIS (l)	N-eksponentas	SVORIS (kg)
	400	154	F0G3304004011310	F0G3304004011300	192	338	367	2.7	1.32	15.3
	500	154	F0G3304005011310	F0G3304005011300	240	423	459	3.4	1.32	18.5
	600	154	F0G3304006011310	F0G3304006011300	288	508	551	4.0	1.32	21.7
	700	154	F0G3304007011310	F0G3304007011300	336	592	643	4.7	1.32	24.9
	800	154	F0G3304008011310	F0G3304008011300	385	677	734	5.4	1.32	28.7
	900	154	F0G3304009011310	F0G3304009011300	433	761	826	6.0	1.32	31.3
	1000	154	F0G3304010011310	F0G3304010011300	481	846	918	6.7	1.32	34.4
	1100	154	F0G3304011011310	F0G3304011011300	529	930	1010	7.4	1.32	37.6
	1200	154	F0G3304012011310	F0G3304012011300	577	1015	1102	8.0	1.32	4.8
	1400	154	F0G3304014011310	F0G3304014011300	673	1184	1285	9.4	1.32	47.2
	1600	154	F0G3304016011310	F0G3304016011300	769	1353	1469	10.7	1.32	53.6
	1800	154	F0G3304018011310	F0G3304018011300	865	1523	1652	12.1	1.32	59.9
	2000	154	F0G3304020011310	F0G3304020011300	961	1692	1836	13.4	1.32	66.3
	2300	154	F0G3304023011310	F0G3304023011300	1106	1946	2111	15.4	1.32	75.9
	2600	154	F0G3304026011310	F0G3304026011300	1250	2199	2387	17.4	1.32	85.4
	3000	154	F0G3304030011310	F0G3304030011300	1442	2538	2754	20.1	1.32	102.1

500

AUKŠTIS 500 mm	ILGIS	GYLIS			Galia (W) 45/35/20°C	Galia (W) 55/45/20°C	Galia (W) 60/45/20°C	TŪRIS (l)	N-eksponentas	SVORIS (kg)
Tipas 11										
	400	62	F0G1105004010310	F0G1105004010300	99	171	185	1.1	1.28	8.8
	500	62	F0G1105005010310	F0G1105005010300	124	214	231	1.4	1.28	1.5
	600	62	F0G1105006010310	F0G1105006010300	148	256	278	1.6	1.28	12.3
	700	62	F0G1105007010310	F0G1105007010300	173	299	324	1.9	1.28	14.6
	800	62	F0G1105008010310	F0G1105008010300	198	342	370	2.2	1.28	15.8
	900	62	F0G1105009010310	F0G1105009010300	223	385	416	2.4	1.28	17.6
	1000	62	F0G1105010010310	F0G1105010010300	247	427	463	2.7	1.28	19.3
	1100	62	F0G1105011010310	F0G1105011010300	272	470	509	3.0	1.28	21.1
	1200	62	F0G1105012010310	F0G1105012010300	297	513	555	3.2	1.28	22.9
	1400	62	F0G1105014010310	F0G1105014010300	346	598	648	3.8	1.28	26.4
	1600	62	F0G1105016010310	F0G1105016010300	396	684	740	4.3	1.28	29.9
	1800	62	F0G1105018010310	F0G1105018010300	445	769	833	4.9	1.28	33.4
	2000	62	F0G1105020010310	F0G1105020010300	495	855	925	5.4	1.28	37.0
	2300	62	F0G1105023010310	F0G1105023010300	569	983	1064	6.2	1.28	42.2
	2600	62	F0G1105026010310	F0G1105026010300	643	1111	1203	7.0	1.28	47.5
	3000	62	F0G1105030010310	F0G1105030010300	742	1282	1388	8.1	1.28	54.6
Tipas 21										
	400	72	F0G2105004011310	F0G2105004011300	133	230	249	2.2	1.29	12.0
	500	72	F0G2105005011310	F0G2105005011300	166	288	312	2.8	1.29	14.6
	600	72	F0G2105006011310	F0G2105006011300	199	345	374	3.3	1.29	17.5
	700	72	F0G2105007011310	F0G2105007011300	232	403	436	3.9	1.29	19.6
	800	72	F0G2105008011310	F0G2105008011300	266	461	499	4.4	1.29	22.2
	900	72	F0G2105009011310	F0G2105009011300	299	518	561	5.0	1.29	24.6
	1000	72	F0G2105010011310	F0G2105010011300	332	576	623	5.5	1.29	27.2
	1100	72	F0G2105011011310	F0G2105011011300	365	633	686	6.0	1.29	29.7

500

AUKŠTIS 500 mm	ILGIS	GYLIS			Galia (W) 45/35/20°C	Galia (W) 55/45/20°C	Galia (W) 60/45/20°C	TŪRIS (l)	N-eksponentas	SVORIS (kg)
	1200	72	F0G2105012011310	F0G2105012011300	398	691	748	6.6	1.29	32.3
	1400	72	F0G2105014011310	F0G2105014011300	465	806	873	7.7	1.29	37.3
	1600	72	F0G2105016011310	F0G2105016011300	531	921	997	8.8	1.29	42.4
	1800	72	F0G2105018011310	F0G2105018011300	597	1036	1122	9.9	1.29	47.5
	2000	72	F0G2105020011310	F0G2105020011300	664	1151	1247	11.0	1.29	52.5
	2300	72	F0G2105023011310	F0G2105023011300	763	1324	1434	12.7	1.29	6.1
	2600	72	F0G2105026011310	F0G2105026011300	863	1497	1621	14.3	1.29	67.8
	3000	72	F0G2105030011310	F0G2105030011300	996	1727	1870	16.5	1.29	77.9
Tipas 22										
	400	104	F0G2205004011310	F0G2205004011300	168	294	319	2.2	1.32	13.7
	500	104	F0G2205005011310	F0G2205005011300	210	368	399	2.8	1.32	16.5
	600	104	F0G2205006011310	F0G2205006011300	251	442	479	3.3	1.32	19.3
	700	104	F0G2205007011310	F0G2205007011300	293	515	559	3.9	1.32	22.2
	800	104	F0G2205008011310	F0G2205008011300	335	589	639	4.4	1.32	25.0
	900	104	F0G2205009011310	F0G2205009011300	377	662	718	5.0	1.32	27.8
	1000	104	F0G2205010011310	F0G2205010011300	419	736	798	5.5	1.32	3.6
	1100	104	F0G2205011011310	F0G2205011011300	461	809	878	6.0	1.32	33.4
	1200	104	F0G2205012011310	F0G2205012011300	503	883	958	6.6	1.32	36.2
	1400	104	F0G2205014011310	F0G2205014011300	587	1030	1118	7.7	1.32	41.9
	1600	104	F0G2205016011310	F0G2205016011300	670	1177	1277	8.8	1.32	47.5
	1800	104	F0G2205018011310	F0G2205018011300	754	1325	1437	9.9	1.32	53.2
	2000	104	F0G2205020011310	F0G2205020011300	838	1472	1597	11.0	1.32	58.8
	2300	104	F0G2205023011310	F0G2205023011300	964	1692	1836	12.7	1.32	67.2
	2600	104	F0G2205026011310	F0G2205026011300	1089	1913	2076	14.3	1.32	75.7
	3000	104	F0G2205030011310	F0G2205030011300	1257	2208	2395	16.5	1.32	87.0
Tipas 33										

500

AUKŠTIS 500 mm	ILGIS	GYLIS			Galia (W) 45/35/20°C	Galia (W) 55/45/20°C	Galia (W) 60/45/20°C	TŪRIS (l)	N-eksponentas	SVORIS (kg)
	400	154	F0G3305004011310	F0G3305004011300	229	404	438	3.3	1.33	18.8
	500	154	F0G3305005011310	F0G3305005011300	286	505	548	4.1	1.33	22.8
	600	154	F0G3305006011310	F0G3305006011300	343	606	657	4.9	1.33	27.0
	700	154	F0G3305007011310	F0G3305007011300	400	706	767	5.7	1.33	4.0
	800	154	F0G3305008011310	F0G3305008011300	457	807	877	6.6	1.33	35.2
	900	154	F0G3305009011310	F0G3305009011300	514	908	986	7.4	1.33	40.0
	1000	154	F0G3305010011310	F0G3305010011300	571	1009	1096	8.2	1.33	43.2
	1100	154	F0G3305011011310	F0G3305011011300	629	1110	1205	9.0	1.33	47.2
	1200	154	F0G3305012011310	F0G3305012011300	686	1211	1315	9.8	1.33	51.3
	1400	154	F0G3305014011310	F0G3305014011300	800	1413	1534	11.5	1.33	59.4
	1600	154	F0G3305016011310	F0G3305016011300	914	1615	1753	13.1	1.33	67.6
	1800	154	F0G3305018011310	F0G3305018011300	1029	1817	1972	14.8	1.33	75.7
	2000	154	F0G3305020011310	F0G3305020011300	1143	2018	2192	16.4	1.33	83.8
	2300	154	F0G3305023011310	F0G3305023011300	1314	2321	2520	18.9	1.33	96.2
	2600	154	F0G3305026011310	F0G3305026011300	1486	2624	2849	21.3	1.33	112.5
	3000	154	F0G3305030011310	F0G3305030011300	1714	3028	3287	24.6	1.33	124.5

600

AUKŠTIS 600 mm	ILGIS	GYLIS			Galia (W) 45/35/20°C	Galia (W) 55/45/20°C	Galia (W) 60/45/20°C	TŪRIS (l)	N-eksponentas	SVORIS (kg)
Tipas 11										
	400	62	F0G1106004010310	F0G1106004010300	115	200	216	1.3	1.28	1.3
	500	62	F0G1106005010310	F0G1106005010300	144	249	270	1.6	1.28	12.4
	600	62	F0G1106006010310	F0G1106006010300	173	299	324	1.9	1.28	14.6
	700	62	F0G1106007010310	F0G1106007010300	202	349	378	2.2	1.28	16.7
	800	62	F0G1106008010310	F0G1106008010300	231	399	432	2.6	1.28	18.9
	900	62	F0G1106009010310	F0G1106009010300	260	449	486	2.9	1.28	3.0
	1000	62	F0G1106010010310	F0G1106010010300	289	499	540	3.2	1.28	23.1
	1100	62	F0G1106011010310	F0G1106011010300	317	549	594	3.5	1.28	25.2
	1200	62	F0G1106012010310	F0G1106012010300	346	599	648	3.8	1.28	27.4
	1400	62	F0G1106014010310	F0G1106014010300	404	699	756	4.5	1.28	31.6
	1600	62	F0G1106016010310	F0G1106016010300	462	798	864	5.1	1.28	35.9
	1800	62	F0G1106018010310	F0G1106018010300	519	898	972	5.8	1.28	4.2
	2000	62	F0G1106020010310	F0G1106020010300	577	998	1080	6.4	1.28	44.4
	2300	62	F0G1106023010310	F0G1106023010300	664	1148	1242	7.4	1.28	5.8
	2600	62	F0G1106026010310	F0G1106026010300	750	1297	1404	8.3	1.28	57.2
	3000	62	F0G1106030010310	F0G1106030010300	866	1497	1620	9.6	1.28	65.7
Tipas 21										
	400	72	F0G2106004011310	F0G2106004011300	153	266	288	2.6	1.30	14.4
	500	72	F0G2106005011310	F0G2106005011300	191	332	360	3.3	1.30	17.5
	600	72	F0G2106006011310	F0G2106006011300	229	398	432	4.0	1.30	2.5
	700	72	F0G2106007011310	F0G2106007011300	267	465	504	4.6	1.30	23.6
	800	72	F0G2106008011310	F0G2106008011300	306	531	576	5.3	1.30	26.6
	900	72	F0G2106009011310	F0G2106009011300	344	598	648	5.9	1.30	29.7
	1000	72	F0G2106010011310	F0G2106010011300	382	664	719	6.6	1.30	32.7
	1100	72	F0G2106011011310	F0G2106011011300	420	731	791	7.3	1.30	35.8

600

AUKŠTIS 600 mm	ILGIS	GYLIS			Galia (W) 45/35/20°C	Galia (W) 55/45/20°C	Galia (W) 60/45/20°C	TŪRIS (l)	N-eksponentas	SVORIS (kg)
	1200	72	F0G2106012011310	F0G2106012011300	458	797	863	7.9	1.30	38.8
	1400	72	F0G2106014011310	F0G2106014011300	535	930	1007	9.2	1.30	44.9
	1600	72	F0G2106016011310	F0G2106016011300	611	1063	1151	10.6	1.30	51.1
	1800	72	F0G2106018011310	F0G2106018011300	687	1195	1295	11.9	1.30	57.1
	2000	72	F0G2106020011310	F0G2106020011300	764	1328	1439	13.2	1.30	63.2
	2300	72	F0G2106023011310	F0G2106023011300	878	1527	1655	15.2	1.30	72.4
	2600	72	F0G2106026011310	F0G2106026011300	993	1727	1871	17.2	1.30	81.5
	3000	72	F0G2106030011310	F0G2106030011300	1146	1992	2158	19.8	1.30	93.7
Tipas 22										
	400	104	F0G2206004011310	F0G2206004011300	193	340	369	2.6	1.33	16.4
	500	104	F0G2206005011310	F0G2206005011300	241	425	461	3.3	1.33	19.8
	600	104	F0G2206006011310	F0G2206006011300	289	510	553	4.0	1.33	23.3
	700	104	F0G2206007011310	F0G2206007011300	337	595	646	4.6	1.33	26.7
	800	104	F0G2206008011310	F0G2206008011300	386	680	738	5.3	1.33	3.2
	900	104	F0G2206009011310	F0G2206009011300	434	765	830	5.9	1.33	33.7
	1000	104	F0G2206010011310	F0G2206010011300	482	850	922	6.6	1.33	37.1
	1100	104	F0G2206011011310	F0G2206011011300	530	935	1015	7.3	1.33	4.6
	1200	104	F0G2206012011310	F0G2206012011300	578	1020	1107	7.9	1.33	44.2
	1400	104	F0G2206014011310	F0G2206014011300	675	1190	1291	9.2	1.33	5.9
	1600	104	F0G2206016011310	F0G2206016011300	771	1360	1476	10.6	1.33	57.8
	1800	104	F0G2206018011310	F0G2206018011300	867	1530	1660	11.9	1.33	64.7
	2000	104	F0G2206020011310	F0G2206020011300	964	1700	1845	13.2	1.33	71.7
	2300	104	F0G2206023011310	F0G2206023011300	1108	1955	2122	15.2	1.33	82.3
	2600	104	F0G2206026011310	F0G2206026011300	1253	2210	2398	17.2	1.33	92.4
	3000	104	F0G2206030011310	F0G2206030011300	1446	2549	2767	19.8	1.33	110.4
Tipas 33										

600

AUKŠTIS 600 mm	ILGIS	GYLIS			Galia (W) 45/35/20°C	Galia (W) 55/45/20°C	Galia (W) 60/45/20°C	TŪRIS (l)	N-eksponentas	SVORIS (kg)
	400	154	F0G3306004011310	F0G3306004011300	263	465	506	3.9	1.34	22.5
	500	154	F0G3306005011310	F0G3306005011300	328	582	632	4.9	1.34	27.4
	600	154	F0G3306006011310	F0G3306006011300	394	698	758	5.9	1.34	32.2
	700	154	F0G3306007011310	F0G3306007011300	459	814	885	6.9	1.34	37.9
	800	154	F0G3306008011310	F0G3306008011300	525	931	1011	7.8	1.34	42.0
	900	154	F0G3306009011310	F0G3306009011300	591	1047	1138	8.8	1.34	46.8
	1000	154	F0G3306010011310	F0G3306010011300	656	1164	1264	9.8	1.34	51.7
	1100	154	F0G3306011011310	F0G3306011011300	722	1280	1390	10.8	1.34	56.6
	1200	154	F0G3306012011310	F0G3306012011300	788	1396	1517	11.8	1.34	61.4
	1400	154	F0G3306014011310	F0G3306014011300	919	1629	1770	13.7	1.34	71.2
	1600	154	F0G3306016011310	F0G3306016011300	1050	1862	2022	15.7	1.34	8.9
	1800	154	F0G3306018011310	F0G3306018011300	1181	2094	2275	17.6	1.34	9.7
	2000	154	F0G3306020011310	F0G3306020011300	1313	2327	2528	19.6	1.34	1.4
	2300	154	F0G3306023011310	F0G3306023011300	1510	2676	2907	22.5	1.34	115.1
	2600	154	F0G3306026011310	F0G3306026011300	1707	3025	3286	25.5	1.34	129.6
	3000	154	F0G3306030011310	F0G3306030011300	1969	3491	3792	29.4	1.34	149.9

900

AUKŠTIS 900 mm	ILGIS	GYLIS			Galia (W) 45/35/20°C	Galia (W) 55/45/20°C	Galia (W) 60/45/20°C	TŪRIS (l)	N-eksponentas	SVORIS (kg)
Tipas 11										
	400	62	F0G1109004010310	F0G1109004010300	159	277	300	1.8	1.30	14.9
	500	62	F0G1109005010310	F0G1109005010300	199	346	375	2.3	1.30	18.2
	600	62	F0G1109006010310	F0G1109006010300	239	416	451	2.7	1.30	21.4
	700	62	F0G1109007010310	F0G1109007010300	278	485	526	3.1	1.30	24.6
	800	62	F0G1109008010310	F0G1109008010300	318	554	601	3.6	1.30	27.9
	900	62	F0G1109009010310	F0G1109009010300	358	624	676	4.0	1.30	32.4
	1000	62	F0G1109010010310	F0G1109010010300	398	693	751	4.5	1.30	34.3
	1100	62	F0G1109011010310	F0G1109011010300	437	762	826	5.0	1.30	37.6
	1200	62	F0G1109012010310	F0G1109012010300	477	831	901	5.4	1.30	4.8
	1400	62	F0G1109014010310	F0G1109014010300	557	970	1051	6.3	1.30	47.3
	1600	62	F0G1109016010310	F0G1109016010300	636	1109	1201	7.2	1.30	53.8
	1800	62	F0G1109018010310	F0G1109018010300	716	1247	1352	8.1	1.30	6.2
	2000	62	F0G1109020010310	F0G1109020010300	795	1386	1502	9.0	1.30	66.7
Tipas 21										
	400	72	F0G2109004011310	F0G2109004011300	202	357	387	3.6	1.34	2.9
	500	72	F0G2109005011310	F0G2109005011300	252	446	484	4.5	1.34	25.5
	600	72	F0G2109006011310	F0G2109006011300	302	535	581	5.4	1.34	3.2
	700	72	F0G2109007011310	F0G2109007011300	353	624	678	6.3	1.34	34.8
	800	72	F0G2109008011310	F0G2109008011300	403	713	775	7.2	1.34	39.4
	900	72	F0G2109009011310	F0G2109009011300	453	802	871	8.1	1.34	44.1
	1000	72	F0G2109010011310	F0G2109010011300	504	891	968	9.0	1.34	48.7
	1100	72	F0G2109011011310	F0G2109011011300	554	981	1065	9.9	1.34	53.4
	1200	72	F0G2109012011310	F0G2109012011300	605	1070	1162	10.8	1.34	58.4
	1400	72	F0G2109014011310	F0G2109014011300	705	1248	1355	12.6	1.34	67.3
	1600	72	F0G2109016011310	F0G2109016011300	806	1426	1549	14.4	1.34	76.6

900

AUKŠTIS 900 mm	ILGIS	GYLIS			Galia (W) 45/35/20°C	Galia (W) 55/45/20°C	Galia (W) 60/45/20°C	TŪRIS (l)	N-eksponentas	SVORIS (kg)
	1800	72	F0G2109018011310	F0G2109018011300	907	1605	1743	16.2	1.34	85.9
	2000	72	F0G2109020011310	F0G2109020011300	1008	1783	1936	18.0	1.34	95.2
Tipas 22										
	400	104	F0G2209004011310	F0G2209004011300	260	462	502	3.6	1.35	23.9
	500	104	F0G2209005011310	F0G2209005011300	325	578	628	4.5	1.35	28.9
	600	104	F0G2209006011310	F0G2209006011300	390	693	753	5.4	1.35	34.9
	700	104	F0G2209007011310	F0G2209007011300	455	809	879	6.3	1.35	39.2
	800	104	F0G2209008011310	F0G2209008011300	520	924	1004	7.2	1.35	44.4
	900	104	F0G2209009011310	F0G2209009011300	585	1040	1130	8.1	1.35	49.5
	1000	104	F0G2209010011310	F0G2209010011300	650	1155	1256	9.0	1.35	54.6
	1100	104	F0G2209011011310	F0G2209011011300	715	1271	1381	9.9	1.35	59.8
	1200	104	F0G2209012011310	F0G2209012011300	780	1386	1507	10.8	1.35	64.9
	1400	104	F0G2209014011310	F0G2209014011300	910	1617	1758	12.6	1.35	75.2
	1600	104	F0G2209016011310	F0G2209016011300	1040	1848	2009	14.4	1.35	85.5
	1800	104	F0G2209018011310	F0G2209018011300	1170	2080	2260	16.2	1.35	95.7
	2000	104	F0G2209020011310	F0G2209020011300	1299	2311	2511	18.0	1.35	110.2
Tipas 33										
	400	154	F0G3309004011310	F0G3309004011300	354	633	688	5.3	1.36	33.8
	500	154	F0G3309005011310	F0G3309005011300	443	791	860	6.7	1.36	4.4
	600	154	F0G3309006011310	F0G3309006011300	531	949	1032	8.0	1.36	47.8
	700	154	F0G3309007011310	F0G3309007011300	620	1107	1204	9.3	1.36	55.2
	800	154	F0G3309008011310	F0G3309008011300	708	1266	1377	10.6	1.36	62.6
	900	154	F0G3309009011310	F0G3309009011300	797	1424	1549	12.0	1.36	69.9
	1000	154	F0G3309010011310	F0G3309010011300	885	1582	1721	13.3	1.36	77.3
	1100	154	F0G3309011011310	F0G3309011011300	974	1740	1893	14.6	1.36	84.7
	1200	154	F0G3309012011310	F0G3309012011300	1062	1898	2065	16.0	1.36	92.6

900

AUKŠTIS 900 mm	ILGIS	GYLIS			Galia (W) 45/35/20°C	Galia (W) 55/45/20°C	Galia (W) 60/45/20°C	TŪRIS (l)	N-eksponentas	SVORIS (kg)
	1400	154	F0G3309014011310	F0G3309014011300	1239	2215	2409	18.6	1.36	111.1
	1600	154	F0G3309016011310	F0G3309016011300	1416	2531	2753	21.3	1.36	121.5
	1800	154	F0G3309018011310	F0G3309018011300	1593	2848	3097	23.9	1.36	136.3
	2000	154	F0G3309020011310	F0G3309020011300	1770	3164	3441	26.6	1.36	151.3