Datu lapa
2026-10-28

Ventil Compact

Populārākais klasiskā tipa panelis radiators ar apakšējo pieslēgumu.

- Elastīga montāža
- Izturīga konstrukcija
- Augsta efektivitāte
- Izmēru dažādība
- Viegla apkope

Ventil Compact ir klasiskā tipa paneļu radiators ar integrētu vārstu, paredzēts ūdens apkures sistēmām; tam ir sānu paneļi, augšējā reste, apakšējais sānu pieslēgums un tas tiek piegādāts komplektā ar stiprinājumiem, aizbāzni un atgaisošanas vārstu.

Pielietojuma joma
Radiators Ventil Compact ir ideāli piemērots privātām un komerciālām ēkām. Tas ir aprīkots ar integrētiem divcauruļu sistēmu vārstiem, ļaujot sānu pieslēgumus (4 × G ½") un apakšējo pieslēgumu (2 × G ½", 50 mm). Pieejams augstumos no 200 līdz 900 mm un garumos no 400 līdz 3000 mm. Paredzēts ūdens apkures sistēmām ar darba spiedienu līdz 10 bāriem un temperatūru līdz 110°C.

Dimensiju noteikšana
Lai nodrošinātu pareizu produktu izvēli, lūdzu, izmantojiet mūsu kalkulatoru rīkus un produktu bukletus. Ja nepieciešama palīdzība, sazinieties ar mūsu pārdošanas komandu.

Lietošana
Pārliecinies, ka visi savienojumi atbilst ISO 228, un izmanto pievienoto montāžas šablonu precīzam attālumam; hidraulisko balansēšanu veic ar piegādāto kv regulāciju; ievēro montāžas norādes sistēmām ar vienu vai divām caurulēm.

AMA teksts
Panelis Ventil Compact ar profilētām sildvirsmām un konvekcijas elementiem aprīkots ar sānu paneļiem un augšējo resti. Pieslēguma iespējas: divi apakšējie un četri sānu G 1/2" iekšējās vītnes pieslēgumi. Radiatorā integrēts vārsta ieliktnis ar priekšiestatījumu. Piegādē iekļauti stiprinājumi, aizbāznis un atgaisošanas vārsts. Atbilst EN442-1 un CE prasībām. Standarta krāsa RAL 9016; citi toņi pieejami pēc pasūtījuma. Garantija 10 gadi. Ražotājam jābūt reģistrētam NATO kodifikācijas sistēmā.

Specifikācijas

ĪPAŠĪBAS	VIENĪBA	VĒRTĪBAS
ETIM klase		EC011022
Materiāls		Tērauds
Tips		11, 21, 22, 33
Virsmas struktūra		Profilēts
Maks. darba spiediens	bar	10
Standarta pieslēgumu skaits		2
Siltuma atdeve pēc EN 442 atzītas laboratorijas		Jā
Maksimālā darbības temperatūra	°C	110
Standarta krāsa		Jā
Krāsa		Balts
RAL numurs		9016
Restes/Vāka plāksne		Jā
Restes/Vāka plāksne		Jā
Spīduma vērtība		Spīdīgs
Vītnes izmērs (collas)		1/2 inch
Pieslēguma vītne		Iekšējā vītne
Ar vienpunkta pieslēgumu		Jā
Ar ventilācijas pieslēgumu		Jā
Ar ventilācijas vārstu/gaisa atgaisotāju		Jā
Ar iztukšošanas iespēju		Jā

Resursi

ProductImage - Panel radiator Ventil Compact, CV, detail.

ProductImage - Panel radiator Ventil Compact, CV.

VENTIL COMPACT (mm)		
	CV11	
A	a1	a2
400-1600	117	-
1800	117	917
2000	117	1017
2300	117	1150
2600	117	1317
3000	117	1517

DimensionalDrawing - Ventil Compact, tabulas rasējums A

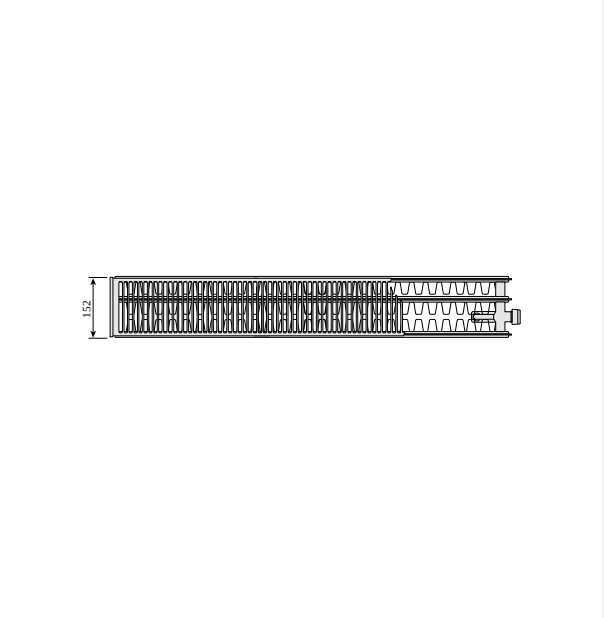

DimensionalDrawing - Ventil Compact, tips 33, skats no augšas

Resursi

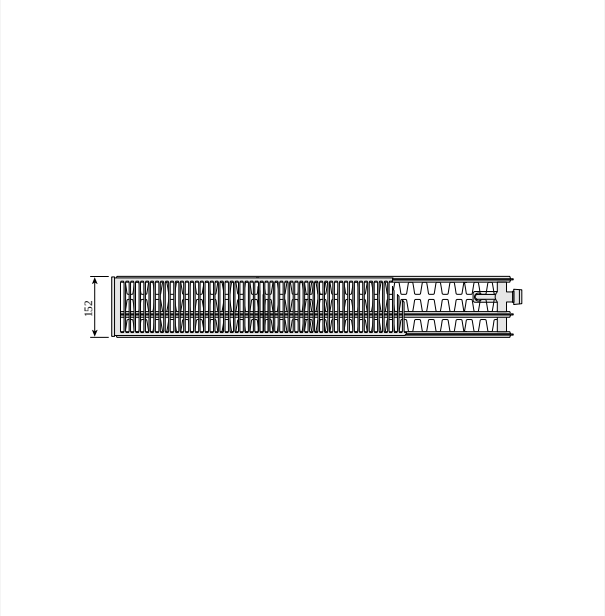

DimensionalDrawing - Ventil Compact, tips 33, skats no augšas

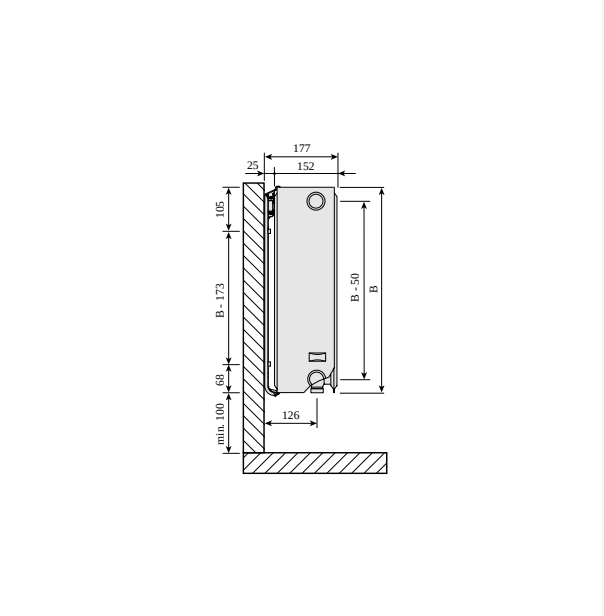

DimensionalDrawing - Ventil Compact, tipi 30, 33, skats no sāniem ar Monclac sienas kronšteiniem

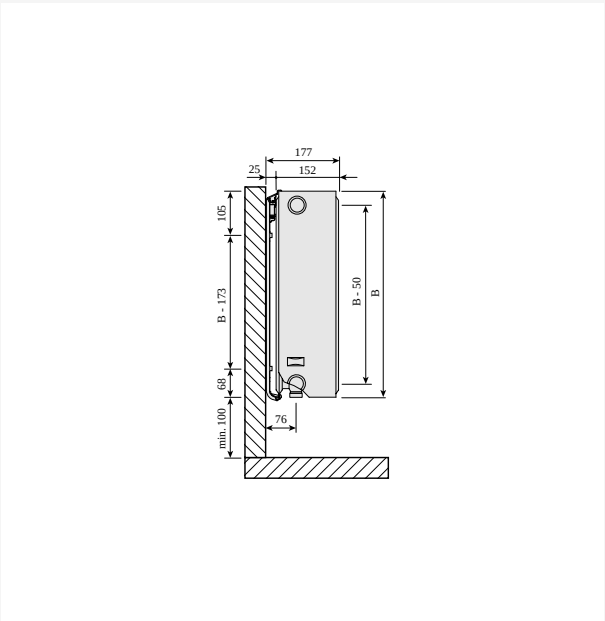

DimensionalDrawing - Ventil Compact, tipi 30, 33, skats no sāniem ar Monclac sienas kronšteiniem

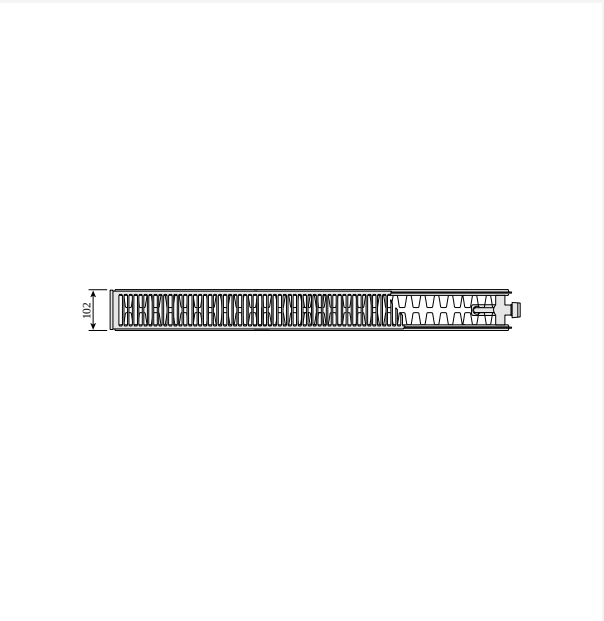

DimensionalDrawing - Ventil Compact, tips 22, skats no augšas

Resursi

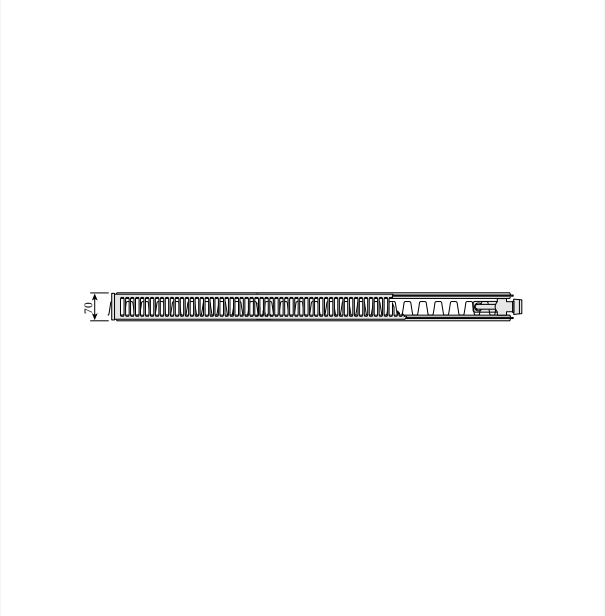

DimensionalDrawing - Ventil Compact, tips 21s, skats no augšas

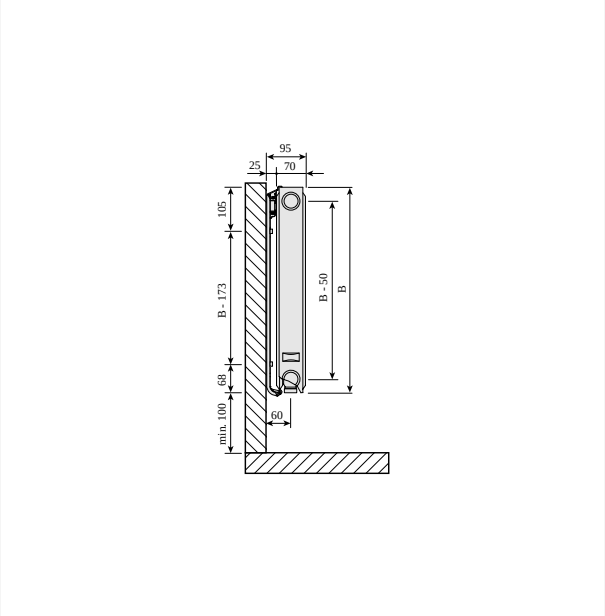

DimensionalDrawing - Ventil Compact, type 21s, skats no sāniem ar Monclac sienas kronšteiniem

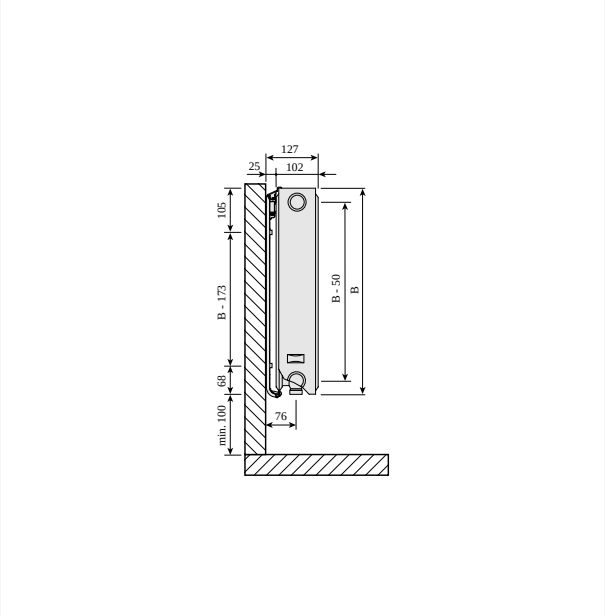

DimensionalDrawing - Ventil Compact, tipi 20, 22, skats no sāniem ar Monclac sienas kronšteiniem

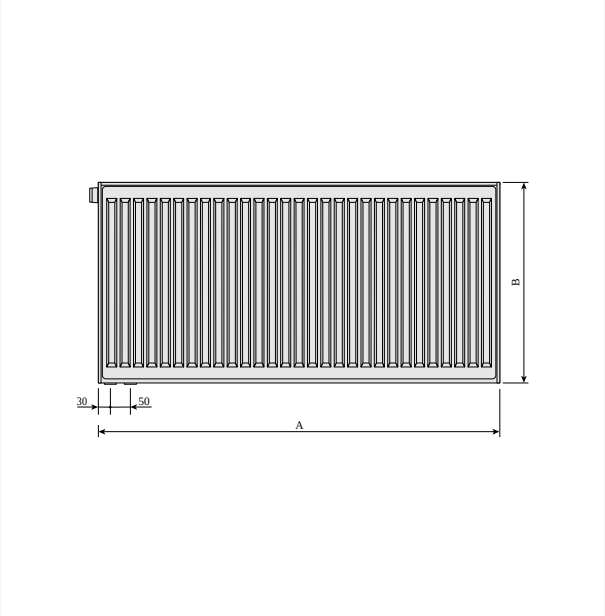

DimensionalDrawing - Ventil Compact, tipi 20, 21s, 22, 30, 33, skats no aizmugures

Resursi

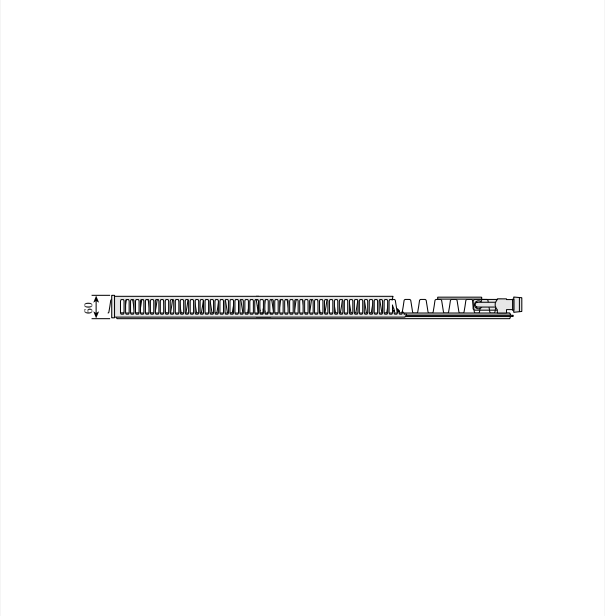

DimensionalDrawing - Ventil Compact, type 11, skats no augšas

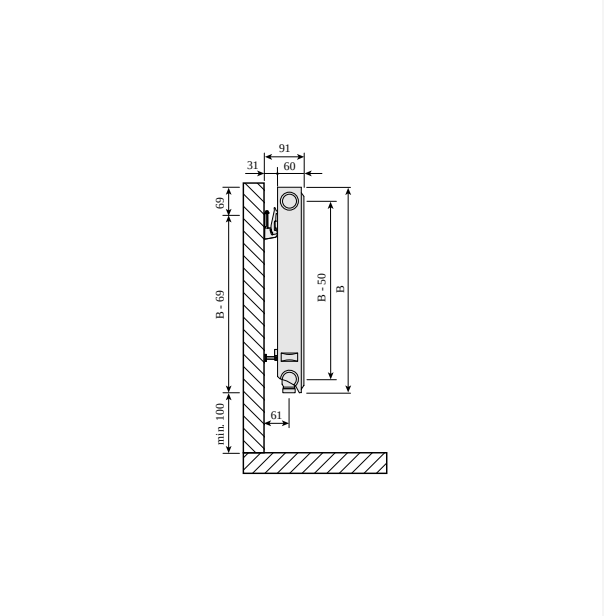

DimensionalDrawing - Ventil Compact, type 11, skats no sāniem ar SSMS sienas kronšteiniem

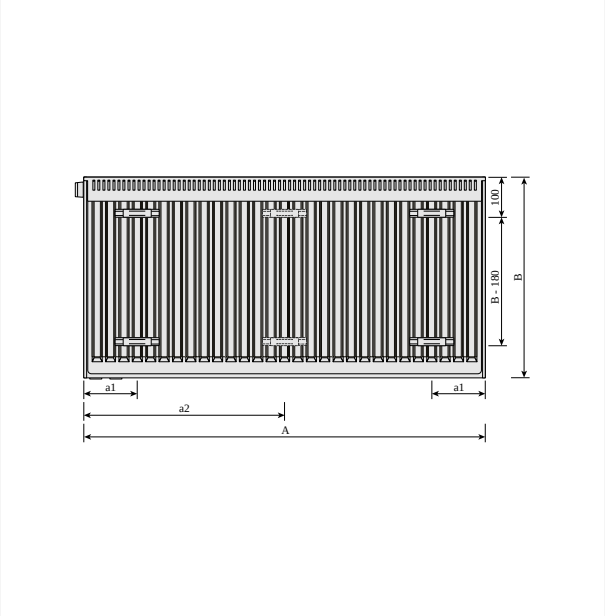

DimensionalDrawing - Compact Ventil Flex, tips 11, skats no aizmugures

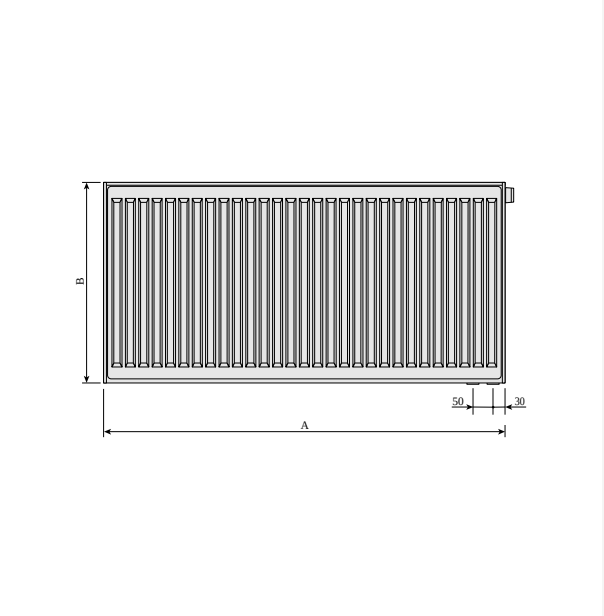

DimensionalDrawing - Ventil Compact, skats no priekšpuses

Resursi

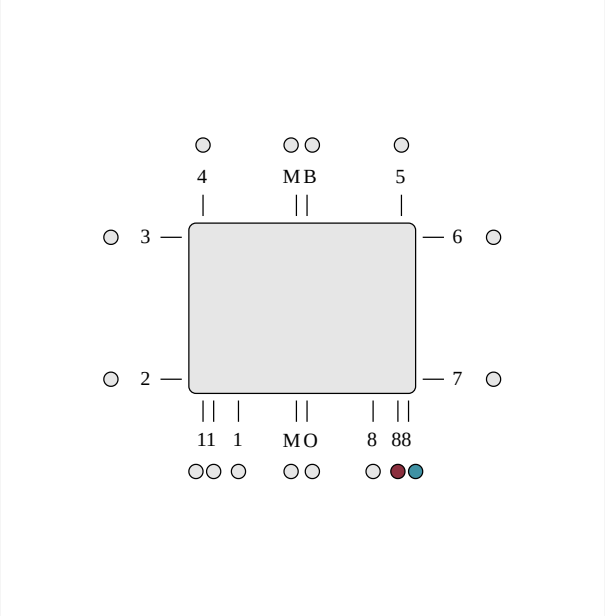

DimensionalDrawing - ETIM 88 LR apakšējais pieslēgums. Apakšējais pieslēgums ar integrētu vārstu prasa vārsta ieliktņa izmantošanu. Neizmantotie pieslēgumi ir noslēgti.

Saistītie produkti

Vārsta inserts M30 OV

Top Grill ©

Air

Remonta krāsa

Sānu panelis ©

Sienas kronšteins Monclac

300

AUGSTUMS 300 mm	GARUMS	DZIĻUMS			Jauda (W) 45/35/20°C	Jauda (W) 55/45/20°C	Jauda (W) 60/45/20°C	TILPUMS (l)	N-ekponents	SVARS (kg)
Tips 11										
	400	60	F071103004010310	F071103004010300	65	113	122	0.7	1.30	4.4
	500	60	F071103005010310	F071103005010300	81	141	152	0.8	1.30	5.2
	600	60	F071103006010310	F071103006010300	97	169	183	1.0	1.30	6.0
	700	60	F071103007010310	F071103007010300	113	197	213	1.2	1.30	6.8
	800	60	F071103008010310	F071103008010300	129	225	244	1.4	1.30	7.6
	900	60	F071103009010310	F071103009010300	146	253	274	1.5	1.30	8.3
	1000	60	F071103010010310	F071103010010300	162	281	305	1.7	1.30	9.1
	1100	60	F071103011010310	F071103011010300	178	309	335	1.9	1.30	10.3
	1200	60	F071103012010310	F071103012010300	194	338	366	2.0	1.30	1.7
	1400	60	F071103014010310	F071103014010300	226	394	427	2.4	1.30	12.2
	1600	60	F071103016010310	F071103016010300	259	450	488	2.7	1.30	13.8
	1800	60	F071103018010310	F071103018010300	291	506	549	3.1	1.30	15.4
	2000	60	F071103020010310	F071103020010300	323	563	610	3.4	1.30	16.9
	2300	60	F071103023010310	F071103023010300	372	647	701	3.9	1.30	19.3
	2600	60	F071103026010310	F071103026010300	420	731	792	4.4	1.30	21.6
	3000	60	F071103030010310	F071103030010300	485	844	914	5.1	1.30	24.7
Tips 21										
	400	70	F072103004011300		92	158	171	1.4	1.28	6.5
	500	70	F072103005011300		115	198	214	1.7	1.28	7.7
	600	70	F072103006011300		137	237	257	2.0	1.28	9.0
	700	70	F072103007011300		160	277	300	2.4	1.28	1.2
	800	70	F072103008011300		183	317	343	2.7	1.28	11.4
	900	70	F072103009011300		206	356	385	3.1	1.28	12.6
	1000	70	F072103010011300		229	396	428	3.4	1.28	13.9

300

AUGSTUMS 300 mm	GARUMS	DZIĻUMS		Jauda (W) 45/35/20°C	Jauda (W) 55/45/20°C	Jauda (W) 60/45/20°C	TILPUMS (l)	N-ekponents	SVARS (kg)
	1100	70	F072103011011300	252	435	471	3.7	1.28	15.1
	1200	70	F072103012011300	275	475	514	4.1	1.28	16.3
	1400	70	F072103014011300	321	554	600	4.8	1.28	18.8
	1600	70	F072103016011300	367	633	685	5.4	1.28	21.3
	1800	70	F072103018011300	412	712	771	6.1	1.28	23.7
	2000	70	F072103020011300	458	791	856	6.8	1.28	26.2
	2300	70	F072103023011300	527	910	985	7.8	1.28	29.9
	2600	70	F072103026011300	596	1029	1113	8.8	1.28	33.6
	3000	70	F072103030011300	687	1187	1285	10.2	1.28	38.5
Tips 22									
	400	102	F072203004011300	113	197	213	1.4	1.31	7.4
	500	102	F072203005011300	141	246	267	1.7	1.31	8.8
	600	102	F072203006011300	169	295	320	2.0	1.31	1.2
	700	102	F072203007011300	197	345	374	2.4	1.31	11.6
	800	102	F072203008011300	225	394	427	2.7	1.31	13.0
	900	102	F072203009011300	253	443	480	3.1	1.31	14.3
	1000	102	F072203010011300	282	492	534	3.4	1.31	15.7
	1100	102	F072203011011300	310	542	587	3.7	1.31	17.1
	1200	102	F072203012011300	338	591	640	4.1	1.31	18.5
	1400	102	F072203014011300	394	689	747	4.8	1.31	21.3
	1600	102	F072203016011300	451	788	854	5.4	1.31	24.2
	1800	102	F072203018011300	507	886	961	6.1	1.31	26.8
	2000	102	F072203020011300	563	985	1067	6.8	1.31	29.6
	2300	102	F072203023011300	648	1132	1228	7.8	1.31	33.7
	2600	102	F072203026011300	732	1280	1388	8.8	1.31	37.9
	3000	102	F072203030011300	845	1477	1601	10.2	1.31	43.4

300

AUGSTUMS 300 mm	GARUMS	DZIĻUMS			Jauda (W) 45/35/20°C	Jauda (W) 55/45/20°C	Jauda (W) 60/45/20°C	TILPUMS (l)	N-ekponents	SVARS (kg)
Tips 33										
	400	152	F073303004011310	F073303004011300	157	275	299	2.0	1.31	1.5
	500	152	F073303005011310	F073303005011300	196	344	373	2.5	1.31	12.6
	600	152	F073303006011310	F073303006011300	236	413	448	3.1	1.31	14.7
	700	152	F073303007011310	F073303007011300	275	482	523	3.6	1.31	16.8
	800	152	F073303008011310	F073303008011300	314	551	597	4.1	1.31	18.9
	900	152	F073303009011310	F073303009011300	354	620	672	4.6	1.31	3.0
	1000	152	F073303010011310	F073303010011300	393	688	747	5.1	1.31	23.8
	1100	152	F073303011011310	F073303011011300	432	757	821	5.6	1.31	25.2
	1200	152	F073303012011310	F073303012011300	472	826	896	6.1	1.31	27.3
	1400	152	F073303014011310	F073303014011300	550	964	1045	7.1	1.31	31.4
	1600	152	F073303016011310	F073303016011300	629	1101	1195	8.2	1.31	35.6
	1800	152	F073303018011310	F073303018011300	707	1239	1344	9.2	1.31	39.8
	2000	152	F073303020011310	F073303020011300	786	1377	1493	10.2	1.31	44.0
	2300	152	F073303023011310	F073303023011300	904	1583	1717	11.7	1.31	5.3
	2600	152	F073303026011310	F073303026011300	1022	1790	1941	13.3	1.31	56.5
	3000	152	F073303030011310	F073303030011300	1179	2065	2240	15.3	1.31	64.9

400

AUGSTUMS 400 mm	GARUMS	DZIĻUMS			Jauda (W) 45/35/20°C	Jauda (W) 55/45/20°C	Jauda (W) 60/45/20°C	TILPUMS (l)	N-ekponents	SVARS (kg)
Tips 11										
	400	60	F071104004010310	F071104004010300	84	146	158	0.9	1.30	5.6
	500	60	F071104005010310	F071104005010300	105	183	198	1.1	1.30	6.6
	600	60	F071104006010310	F071104006010300	126	219	238	1.3	1.30	7.8
	700	60	F071104007010310	F071104007010300	147	256	277	1.5	1.30	8.8
	800	60	F071104008010310	F071104008010300	168	292	317	1.8	1.30	10.2
	900	60	F071104009010310	F071104009010300	189	329	356	2.0	1.30	1.9
	1000	60	F071104010010310	F071104010010300	210	366	396	2.2	1.30	12.0
	1100	60	F071104011010310	F071104011010300	231	402	436	2.4	1.30	13.5
	1200	60	F071104012010310	F071104012010300	252	439	475	2.6	1.30	14.1
	1400	60	F071104014010310	F071104014010300	294	512	555	3.1	1.30	16.3
	1600	60	F071104016010310	F071104016010300	335	585	634	3.5	1.30	18.4
	1800	60	F071104018010310	F071104018010300	377	658	713	4.0	1.30	2.5
	2000	60	F071104020010310	F071104020010300	419	731	792	4.4	1.30	22.7
	2300	60	F071104023010310	F071104023010300	482	841	911	5.1	1.30	25.9
	2600	60	F071104026010310	F071104026010300	545	950	1030	5.7	1.30	29.7
	3000	60	F071104030010310	F071104030010300	629	1097	1188	6.6	1.30	33.4
Tips 21										
	400	70	F072104004011300		115	199	215	1.8	1.29	8.4
	500	70	F072104005011300		143	249	269	2.3	1.29	1.6
	600	70	F072104006011300		172	298	323	2.7	1.29	11.8
	700	70	F072104007011300		200	348	377	3.1	1.29	13.3
	800	70	F072104008011300		229	398	431	3.6	1.29	15.0
	900	70	F072104009011300		258	448	485	4.0	1.29	16.6
	1000	70	F072104010011300		286	497	539	4.5	1.29	18.3
	1100	70	F072104011011300		315	547	592	5.0	1.29	19.9

400

AUGSTUMS 400 mm	GARUMS	DZIĻUMS		Jauda (W) 45/35/20°C	Jauda (W) 55/45/20°C	Jauda (W) 60/45/20°C	TILPUMS (l)	N-ekponents	SVARS (kg)
	1200	70	F07210401201130 0	344	597	646	5.4	1.29	21.5
	1400	70	F07210401401130 0	401	696	754	6.3	1.29	24.8
	1600	70	F07210401601130 0	458	796	862	7.2	1.29	28.9
	1800	70	F07210401801130 0	515	895	969	8.1	1.29	31.4
	2000	70	F07210402001130 0	573	994	1077	9.0	1.29	34.6
	2300	70	F07210402301130 0	658	1144	1239	10.3	1.29	39.6
	2600	70	F07210402601130 0	744	1293	1400	11.7	1.29	44.5
	3000	70	F07210403001130 0	859	1492	1616	13.5	1.29	51.2
Tips 22									
	400	102	F07220400401130 0	142	249	270	1.8	1.32	9.6
	500	102	F07220400501130 0	177	311	338	2.3	1.32	11.5
	600	102	F07220400601130 0	213	374	405	2.7	1.32	13.4
	700	102	F07220400701130 0	248	436	473	3.1	1.32	15.3
	800	102	F07220400801130 0	284	498	540	3.6	1.32	17.2
	900	102	F07220400901130 0	319	560	608	4.0	1.32	19.8
	1000	102	F07220401001130 0	355	623	675	4.5	1.32	3.0
	1100	102	F07220401101130 0	390	685	743	5.0	1.32	22.9
	1200	102	F07220401201130 0	426	747	811	5.4	1.32	24.8
	1400	102	F07220401401130 0	497	872	946	6.3	1.32	28.6
	1600	102	F07220401601130 0	568	996	1081	7.2	1.32	32.4
	1800	102	F07220401801130 0	639	1121	1216	8.1	1.32	36.3
	2000	102	F07220402001130 0	710	1245	1351	9.0	1.32	4.1
	2300	102	F07220402301130 0	816	1432	1554	10.3	1.32	45.7
	2600	102	F07220402601130 0	923	1619	1756	11.7	1.32	51.4
	3000	102	F07220403001130 0	1064	1868	2026	13.5	1.32	59.4
Tips 33									

400

AUGSTUMS 400 mm	GARUMS	DZIĻUMS			Jauda (W) 45/35/20°C	Jauda (W) 55/45/20°C	Jauda (W) 60/45/20°C	TILPUMS (l)	N-ekponents	SVARS (kg)
	400	152	F073304004011310	F073304004011300	196	345	375	2.7	1.33	13.8
	500	152	F073304005011310	F073304005011300	245	432	468	3.4	1.33	16.6
	600	152	F073304006011310	F073304006011300	294	518	562	4.0	1.33	19.4
	700	152	F073304007011310	F073304007011300	343	604	656	4.7	1.33	22.3
	800	152	F073304008011310	F073304008011300	392	691	749	5.4	1.33	25.9
	900	152	F073304009011310	F073304009011300	441	777	843	6.0	1.33	27.9
	1000	152	F073304010011310	F073304010011300	490	863	937	6.7	1.33	3.7
	1100	152	F073304011011310	F073304011011300	539	950	1031	7.4	1.33	33.6
	1200	152	F073304012011310	F073304012011300	588	1036	1124	8.0	1.33	36.4
	1400	152	F073304014011310	F073304014011300	686	1209	1312	9.4	1.33	42.2
	1600	152	F073304016011310	F073304016011300	785	1381	1499	10.7	1.33	47.7
	1800	152	F073304018011310	F073304018011300	883	1554	1686	12.1	1.33	53.4
	2000	152	F073304020011310	F073304020011300	981	1726	1874	13.4	1.33	59.0
	2300	152	F073304023011310	F073304023011300	1128	1985	2155	15.4	1.33	67.4
	2600	152	F073304026011310	F073304026011300	1275	2244	2436	17.4	1.33	75.9
	3000	152	F073304030011310	F073304030011300	1471	2590	2811	20.1	1.33	87.2

450

AUGSTUMS 450 mm	GARUMS	DZIĻUMS			Jauda (W) 45/35/20°C	Jauda (W) 55/45/20°C	Jauda (W) 60/45/20°C	TILPUMS (l)	N-ekponents	SVARS (kg)
Tips 11										
	400	60	F071104504010310	F071104504010300	93	162	176	1.0	1.30	6.4
	500	60	F071104505010310	F071104505010300	116	203	220	1.3	1.30	7.7
	600	60	F071104506010310	F071104506010300	139	243	264	1.5	1.30	9.0
	700	60	F071104507010310	F071104507010300	163	284	308	1.8	1.30	1.3
	800	60	F071104508010310	F071104508010300	186	325	352	2.0	1.30	11.5
	900	60	F071104509010310	F071104509010300	209	365	396	2.3	1.30	12.9
	1000	60	F071104510010310	F071104510010300	232	406	440	2.5	1.30	14.6
	1100	60	F071104511010310	F071104511010300	256	446	484	2.8	1.30	15.3
	1200	60	F071104512010310	F071104512010300	279	487	528	3.0	1.30	16.6
	1400	60	F071104514010310	F071104514010300	325	568	616	3.5	1.30	19.2
	1600	60	F071104516010310	F071104516010300	372	649	703	4.0	1.30	21.7
	1800	60	F071104518010310	F071104518010300	418	730	791	4.5	1.30	24.2
	2000	60	F071104520010310	F071104520010300	465	811	879	5.0	1.30	26.8
	2300	60	F071104523010310	F071104523010300	535	933	1011	5.8	1.30	3.6
	2600	60	F071104526010310	F071104526010300	604	1055	1143	6.5	1.30	34.4
	3000	60	F071104530010310	F071104530010300	697	1217	1319	7.5	1.30	39.5
Tips 21										
	400	70	F072104504011300		125	218	236	2.0	1.30	10.2
	500	70	F072104505011300		157	273	296	2.5	1.30	11.8
	600	70	F072104506011300		188	327	355	3.0	1.30	13.8
	700	70	F072104507011300		219	382	414	3.5	1.30	15.7
	800	70	F072104508011300		250	436	473	4.0	1.30	17.7
	900	70	F072104509011300		282	491	532	4.5	1.30	19.7
	1000	70	F072104510011300		313	545	591	5.0	1.30	21.7
	1100	70	F072104511011300		344	600	650	5.5	1.30	23.6

450

AUGSTUMS 450 mm	GARUMS	DZIĻUMS		Jauda (W) 45/35/20°C	Jauda (W) 55/45/20°C	Jauda (W) 60/45/20°C	TILPUMS (l)	N-ekponents	SVARS (kg)
	1200	70	F07210451201130 0	376	654	709	6.0	1.30	25.6
	1400	70	F07210451401130 0	438	764	827	7.0	1.30	29.5
	1600	70	F07210451601130 0	501	873	946	8.0	1.30	33.5
	1800	70	F07210451801130 0	564	982	1064	9.0	1.30	37.4
	2000	70	F07210452001130 0	626	1091	1182	10.0	1.30	41.4
	2300	70	F07210452301130 0	720	1254	1359	11.5	1.30	47.4
	2600	70	F07210452601130 0	814	1418	1537	13.0	1.30	53.2
	3000	70	F07210453001130 0	939	1636	1773	15.0	1.30	61.1
Tips 22									
	400	102	F07220450401130 0	156	274	297	2.0	1.32	11.2
	500	102	F07220450501130 0	195	343	372	2.5	1.32	13.4
	600	102	F07220450601130 0	234	411	446	3.0	1.32	15.7
	700	102	F07220450701130 0	273	480	521	3.5	1.32	18.0
	800	102	F07220450801130 0	312	548	595	4.0	1.32	2.3
	900	102	F07220450901130 0	351	617	669	4.5	1.32	22.5
	1000	102	F07220451001130 0	390	685	744	5.0	1.32	24.7
	1100	102	F07220451101130 0	429	754	818	5.5	1.32	27.0
	1200	102	F07220451201130 0	468	822	892	6.0	1.32	29.2
	1400	102	F07220451401130 0	546	960	1041	7.0	1.32	33.7
	1600	102	F07220451601130 0	624	1097	1190	8.0	1.32	38.2
	1800	102	F07220451801130 0	702	1234	1339	9.0	1.32	42.8
	2000	102	F07220452001130 0	780	1371	1487	10.0	1.32	47.3
	2300	102	F07220452301130 0	897	1576	1711	11.5	1.32	54.3
	2600	102	F07220452601130 0	1014	1782	1934	13.0	1.32	6.8
	3000	102	F07220453001130 0	1169	2056	2231	15.0	1.32	69.8
Tips 33									

450

AUGSTUMS 450 mm	GARUMS	DZIĻUMS			Jauda (W) 45/35/20°C	Jauda (W) 55/45/20°C	Jauda (W) 60/45/20°C	TILPUMS (l)	N-ekponents	SVARS (kg)
	400	152	F073304504011310	F073304504011300	215	379	411	3.0	1.33	15.9
	500	152	F073304505011310	F073304505011300	268	473	514	3.8	1.33	19.3
	600	152	F073304506011310	F073304506011300	322	568	617	4.5	1.33	22.7
	700	152	F073304507011310	F073304507011300	376	663	720	5.3	1.33	26.2
	800	152	F073304508011310	F073304508011300	429	757	822	6.0	1.33	29.6
	900	152	F073304509011310	F073304509011300	483	852	925	6.8	1.33	33.2
	1000	152	F073304510011310	F073304510011300	536	947	1028	7.5	1.33	36.4
	1100	152	F073304511011310	F073304511011300	590	1041	1131	8.3	1.33	39.9
	1200	152	F073304512011310	F073304512011300	644	1136	1233	9.0	1.33	43.3
	1400	152	F073304514011310	F073304514011300	751	1326	1439	10.5	1.33	5.2
	1600	152	F073304516011310	F073304516011300	858	1515	1645	12.0	1.33	57.4
	1800	152	F073304518011310	F073304518011300	966	1704	1850	13.5	1.33	63.9
	2000	152	F073304520011310	F073304520011300	1073	1894	2056	15.0	1.33	7.8
	2300	152	F073304523011310	F073304523011300	1234	2178	2364	17.3	1.33	9.0
	2600	152	F073304526011310	F073304526011300	1395	2462	2673	19.5	1.33	91.3
	3000	152	F073304530011310	F073304530011300	1609	2840	3084	22.5	1.33	109.2

500

AUGSTUMS 500 mm	GARUMS	DZIĻUMS			Jauda (W) 45/35/20°C	Jauda (W) 55/45/20°C	Jauda (W) 60/45/20°C	TILPUMS (l)	N-ekponents	SVARS (kg)
Tips 11										
	400	60	F071105004010310	F071105004010300	102	178	193	1.1	1.31	6.9
	500	60	F071105005010310	F071105005010300	127	223	241	1.4	1.31	8.2
	600	60	F071105006010310	F071105006010300	153	267	290	1.6	1.31	9.5
	700	60	F071105007010310	F071105007010300	178	312	338	1.9	1.31	1.8
	800	60	F071105008010310	F071105008010300	204	356	386	2.2	1.31	12.1
	900	60	F071105009010310	F071105009010300	229	401	434	2.4	1.31	13.4
	1000	60	F071105010010310	F071105010010300	255	445	483	2.7	1.31	14.7
	1100	60	F071105011010310	F071105011010300	280	490	531	3.0	1.31	16.4
	1200	60	F071105012010310	F071105012010300	306	534	579	3.2	1.31	17.4
	1400	60	F071105014010310	F071105014010300	357	623	676	3.8	1.31	20.0
	1600	60	F071105016010310	F071105016010300	408	712	772	4.3	1.31	22.6
	1800	60	F071105018010310	F071105018010300	459	801	869	4.9	1.31	25.2
	2000	60	F071105020010310	F071105020010300	510	890	965	5.4	1.31	27.8
	2300	60	F071105023010310	F071105023010300	586	1024	1110	6.2	1.31	31.8
	2600	60	F071105026010310	F071105026010300	663	1158	1255	7.0	1.31	35.7
	3000	60	F071105030010310	F071105030010300	765	1336	1448	8.1	1.31	4.9
Tips 21										
	400	70	F072105004011300		136	237	257	2.2	1.31	1.8
	500	70	F072105005011300		170	296	321	2.8	1.31	12.2
	600	70	F072105006011300		204	356	386	3.3	1.31	14.3
	700	70	F072105007011300		237	415	450	3.9	1.31	16.3
	800	70	F072105008011300		271	474	514	4.4	1.31	18.4
	900	70	F072105009011300		305	533	578	5.0	1.31	2.5
	1000	70	F072105010011300		339	593	643	5.5	1.31	22.6
	1100	70	F072105011011300		373	652	707	6.0	1.31	24.7

500

AUGSTUMS 500 mm	GARUMS	DZIĻUMS		Jauda (W) 45/35/20°C	Jauda (W) 55/45/20°C	Jauda (W) 60/45/20°C	TILPUMS (l)	N-ekponents	SVARS (kg)
	1200	70	F07210501201130 0	407	711	771	6.6	1.31	26.7
	1400	70	F07210501401130 0	475	830	900	7.7	1.31	3.9
	1600	70	F07210501601130 0	543	948	1028	8.8	1.31	35.8
	1800	70	F07210501801130 0	611	1067	1157	9.9	1.31	39.3
	2000	70	F07210502001130 0	679	1185	1285	11.0	1.31	43.5
	2300	70	F07210502301130 0	780	1363	1478	12.7	1.31	49.7
	2600	70	F07210502601130 0	882	1541	1671	14.3	1.31	55.9
	3000	70	F07210503001130 0	1018	1778	1928	16.5	1.31	64.2
Tips 22									
	400	102	F07220500401130 0	169	299	324	2.2	1.33	11.9
	500	102	F07220500501130 0	212	373	405	2.8	1.33	14.2
	600	102	F07220500601130 0	254	448	486	3.3	1.33	16.5
	700	102	F07220500701130 0	297	522	567	3.9	1.33	19.0
	800	102	F07220500801130 0	339	597	648	4.4	1.33	21.3
	900	102	F07220500901130 0	381	672	729	5.0	1.33	23.6
	1000	102	F07220501001130 0	424	746	810	5.5	1.33	26.9
	1100	102	F07220501101130 0	466	821	891	6.0	1.33	28.4
	1200	102	F07220501201130 0	508	896	972	6.6	1.33	3.7
	1400	102	F07220501401130 0	593	1045	1134	7.7	1.33	35.5
	1600	102	F07220501601130 0	678	1194	1296	8.8	1.33	4.2
	1800	102	F07220501801130 0	763	1343	1458	9.9	1.33	44.9
	2000	102	F07220502001130 0	847	1493	1620	11.0	1.33	49.7
	2300	102	F07220502301130 0	974	1717	1863	12.7	1.33	56.8
	2600	102	F07220502601130 0	1102	1940	2106	14.3	1.33	63.9
	3000	102	F07220503001130 0	1271	2239	2430	16.5	1.33	73.3
Tips 33									

500

AUGSTUMS 500 mm	GARUMS	DZIĻUMS			Jauda (W) 45/35/20°C	Jauda (W) 55/45/20°C	Jauda (W) 60/45/20°C	TILPUMS (l)	N-ekponents	SVARS (kg)
	400	152	F073305004011310	F073305004011300	232	411	447	3.3	1.34	16.9
	500	152	F073305005011310	F073305005011300	290	514	558	4.1	1.34	2.5
	600	152	F073305006011310	F073305006011300	349	617	670	4.9	1.34	24.1
	700	152	F073305007011310	F073305007011300	407	719	781	5.7	1.34	27.7
	800	152	F073305008011310	F073305008011300	465	822	893	6.6	1.34	31.3
	900	152	F073305009011310	F073305009011300	523	925	1005	7.4	1.34	34.9
	1000	152	F073305010011310	F073305010011300	581	1028	1116	8.2	1.34	38.6
	1100	152	F073305011011310	F073305011011300	639	1131	1228	9.0	1.34	42.2
	1200	152	F073305012011310	F073305012011300	697	1233	1340	9.8	1.34	45.8
	1400	152	F073305014011310	F073305014011300	813	1439	1563	11.5	1.34	53.2
	1600	152	F073305016011310	F073305016011300	930	1645	1786	13.1	1.34	6.3
	1800	152	F073305018011310	F073305018011300	1046	1850	2009	14.8	1.34	67.5
	2000	152	F073305020011310	F073305020011300	1162	2056	2233	16.4	1.34	74.8
	2300	152	F073305023011310	F073305023011300	1336	2364	2567	18.9	1.34	85.5
	2600	152	F073305026011310	F073305026011300	1511	2672	2902	21.3	1.34	100.2
	3000	152	F073305030011310	F073305030011300	1743	3084	3349	24.6	1.34	11.8

600

AUGSTUMS 600 mm	GARUMS	DZIĻUMS			Jauda (W) 45/35/20°C	Jauda (W) 55/45/20°C	Jauda (W) 60/45/20°C	TILPUMS (l)	N-ekponents	SVARS (kg)
Tips 11										
	400	60	F071106004010310	F071106004010300	119	208	226	1.3	1.31	8.4
	500	60	F071106005010310	F071106005010300	149	260	282	1.6	1.31	10.0
	600	60	F071106006010310	F071106006010300	179	313	339	1.9	1.31	11.2
	700	60	F071106007010310	F071106007010300	208	365	395	2.2	1.31	12.8
	800	60	F071106008010310	F071106008010300	238	417	452	2.6	1.31	14.4
	900	60	F071106009010310	F071106009010300	268	469	508	2.9	1.31	16.2
	1000	60	F071106010010310	F071106010010300	298	521	565	3.2	1.31	17.6
	1100	60	F071106011010310	F071106011010300	327	573	621	3.5	1.31	19.2
	1200	60	F071106012010310	F071106012010300	357	625	678	3.8	1.31	2.8
	1400	60	F071106014010310	F071106014010300	417	729	791	4.5	1.31	24.0
	1600	60	F071106016010310	F071106016010300	476	834	904	5.1	1.31	27.2
	1800	60	F071106018010310	F071106018010300	536	938	1017	5.8	1.31	3.3
	2000	60	F071106020010310	F071106020010300	595	1042	1130	6.4	1.31	33.5
	2300	60	F071106023010310	F071106023010300	685	1198	1299	7.4	1.31	38.3
	2600	60	F071106026010310	F071106026010300	774	1354	1469	8.3	1.31	43.6
	3000	60	F071106030010310	F071106030010300	893	1563	1695	9.6	1.31	49.4
Tips 21										
	400	70	F072106004011300		155	273	296	2.6	1.32	12.2
	500	70	F072106005011300		194	341	370	3.3	1.32	14.7
	600	70	F072106006011300		233	409	444	4.0	1.32	17.2
	700	70	F072106007011300		272	478	518	4.6	1.32	19.7
	800	70	F072106008011300		311	546	592	5.3	1.32	22.2
	900	70	F072106009011300		349	614	666	5.9	1.32	24.7
	1000	70	F072106010011300		388	682	740	6.6	1.32	27.2
	1100	70	F072106011011300		427	751	814	7.3	1.32	29.7

600

AUGSTUMS 600 mm	GARUMS	DZIĻUMS		Jauda (W) 45/35/20°C	Jauda (W) 55/45/20°C	Jauda (W) 60/45/20°C	TILPUMS (l)	N-ekponents	SVARS (kg)
	1200	70	F07210601201130 0	466	819	888	7.9	1.32	32.2
	1400	70	F07210601401130 0	544	955	1036	9.2	1.32	37.3
	1600	70	F07210601601130 0	621	1092	1184	10.6	1.32	42.3
	1800	70	F07210601801130 0	699	1228	1332	11.9	1.32	47.3
	2000	70	F07210602001130 0	777	1365	1481	13.2	1.32	52.3
	2300	70	F07210602301130 0	893	1569	1703	15.2	1.32	59.8
	2600	70	F07210602601130 0	1009	1774	1925	17.2	1.32	67.4
	3000	70	F07210603001130 0	1165	2047	2221	19.8	1.32	77.4
Tips 22									
	400	102	F07220600401130 0	195	346	375	2.6	1.34	14.1
	500	102	F07220600501130 0	244	432	469	3.3	1.34	17.4
	600	102	F07220600601130 0	293	518	563	4.0	1.34	19.9
	700	102	F07220600701130 0	342	605	657	4.6	1.34	22.9
	800	102	F07220600801130 0	391	691	750	5.3	1.34	25.8
	900	102	F07220600901130 0	440	777	844	5.9	1.34	28.7
	1000	102	F07220601001130 0	488	864	938	6.6	1.34	31.6
	1100	102	F07220601101130 0	537	950	1032	7.3	1.34	34.5
	1200	102	F07220601201130 0	586	1037	1126	7.9	1.34	37.4
	1400	102	F07220601401130 0	684	1209	1313	9.2	1.34	43.3
	1600	102	F07220601601130 0	782	1382	1501	10.6	1.34	50.0
	1800	102	F07220601801130 0	879	1555	1688	11.9	1.34	54.9
	2000	102	F07220602001130 0	977	1728	1876	13.2	1.34	6.8
	2300	102	F07220602301130 0	1124	1987	2157	15.2	1.34	69.5
	2600	102	F07220602601130 0	1270	2246	2439	17.2	1.34	78.2
	3000	102	F07220603001130 0	1465	2591	2814	19.8	1.34	89.9
Tips 33									

600

AUGSTUMS 600 mm	GARUMS	DZIĻUMS			Jauda (W) 45/35/20°C	Jauda (W) 55/45/20°C	Jauda (W) 60/45/20°C	TILPUMS (l)	N-ekponents	SVARS (kg)
	400	152	F073306004011310	F073306004011300	266	473	514	3.9	1.35	2.2
	500	152	F073306005011310	F073306005011300	333	592	643	4.9	1.35	24.6
	600	152	F073306006011310	F073306006011300	399	710	771	5.9	1.35	28.9
	700	152	F073306007011310	F073306007011300	466	828	900	6.9	1.35	33.2
	800	152	F073306008011310	F073306008011300	532	946	1029	7.8	1.35	37.5
	900	152	F073306009011310	F073306009011300	599	1065	1157	8.8	1.35	41.9
	1000	152	F073306010011310	F073306010011300	665	1183	1286	9.8	1.35	46.2
	1100	152	F073306011011310	F073306011011300	732	1301	1414	10.8	1.35	5.5
	1200	152	F073306012011310	F073306012011300	798	1420	1543	11.8	1.35	54.9
	1400	152	F073306014011310	F073306014011300	932	1656	1800	13.7	1.35	63.5
	1600	152	F073306016011310	F073306016011300	1065	1893	2057	15.7	1.35	72.2
	1800	152	F073306018011310	F073306018011300	1198	2129	2314	17.6	1.35	8.8
	2000	152	F073306020011310	F073306020011300	1331	2366	2571	19.6	1.35	89.5
	2300	152	F073306023011310	F073306023011300	1530	2721	2957	22.5	1.35	106.6
	2600	152	F073306026011310	F073306026011300	1730	3076	3343	25.5	1.35	115.5
	3000	152	F073306030011310	F073306030011300	1996	3549	3857	29.4	1.35	132.8

900

AUGSTUMS 900 mm	GARUMS	DZIĻUMS			Jauda (W) 45/35/20°C	Jauda (W) 55/45/20°C	Jauda (W) 60/45/20°C	TILPUMS (l)	N-ekponents	SVARS (kg)
Tips 11										
	400	60	F071109004010310	F071109004010300	166	291	316	1.8	1.32	11.6
	500	60	F071109005010310	F071109005010300	208	364	395	2.3	1.32	14.6
	600	60	F071109006010310	F071109006010300	249	437	474	2.7	1.32	16.4
	700	60	F071109007010310	F071109007010300	291	510	553	3.1	1.32	18.9
	800	60	F071109008010310	F071109008010300	332	583	632	3.6	1.32	21.3
	900	60	F071109009010310	F071109009010300	374	655	711	4.0	1.32	23.7
	1000	60	F071109010010310	F071109010010300	415	728	790	4.5	1.32	26.2
	1100	60	F071109011010310	F071109011010300	457	801	869	5.0	1.32	28.6
	1200	60	F071109012010310	F071109012010300	498	874	948	5.4	1.32	31.2
	1400	60	F071109014010310	F071109014010300	581	1019	1106	6.3	1.32	35.9
	1600	60	F071109016010310	F071109016010300	664	1165	1264	7.2	1.32	4.7
	1800	60	F071109018010310	F071109018010300	747	1311	1422	8.1	1.32	45.6
	2000	60	F071109020010310	F071109020010300	830	1456	1580	9.0	1.32	5.5
	2300	60	F071109023010310	F071109023010300	955	1675	1817	10.3	1.32	57.8
	2600	60	F071109026010310	F071109026010300	1079	1893	2054	11.7	1.32	65.6
	3000	60	F071109030010310	F071109030010300	1245	2185	2370	13.5	1.32	74.8
Tips 21										
	400	70	F072109004011300		212	376	408	3.6	1.34	17.5
	500	70	F072109005011300		265	470	510	4.5	1.34	21.4
	600	70	F072109006011300		318	563	612	5.4	1.34	25.2
	800	70	F072109008011300		424	751	816	7.2	1.34	32.9
	900	70	F072109009011300		477	845	918	8.1	1.34	36.7
	1000	70	F072109010011300		530	939	1020	9.0	1.34	4.6
	1100	70	F072109011011300		583	1033	1122	9.9	1.34	44.4
	1200	70	F072109012011300		636	1127	1224	10.8	1.34	48.2

900

AUGSTUMS 900 mm	GARUMS	DZIĻUMS		Jauda (W) 45/35/20°C	Jauda (W) 55/45/20°C	Jauda (W) 60/45/20°C	TILPUMS (l)	N-ekponents	SVARS (kg)
	1400	70	F072109014011300	742	1315	1428	12.6	1.34	55.9
	1600	70	F072109016011300	849	1502	1632	14.4	1.34	63.6
	1800	70	F072109018011300	955	1690	1836	16.2	1.34	71.3
	2000	70	F072109020011300	1061	1878	2040	18.0	1.34	78.9
	2300	70	F072109023011300	1220	2160	2346	20.7	1.34	9.5
	2600	70	F072109026011300	1379	2442	2652	23.4	1.34	106.0
	3000	70	F072109030011300	1591	2817	3060	27.0	1.34	122.0
Tips 22									
	400	102	F072209004011300	268	478	520	3.6	1.36	2.4
	500	102	F072209005011300	335	597	649	4.5	1.36	24.8
	600	102	F072209006011300	402	717	779	5.4	1.36	29.1
	700	102	F072209007011300	469	836	909	6.3	1.36	33.4
	800	102	F072209008011300	536	956	1039	7.2	1.36	37.8
	900	102	F072209009011300	603	1075	1169	8.1	1.36	42.1
	1000	102	F072209010011300	670	1194	1299	9.0	1.36	46.5
	1100	102	F072209011011300	737	1314	1429	9.9	1.36	5.8
	1200	102	F072209012011300	804	1433	1559	10.8	1.36	55.1
	1400	102	F072209014011300	938	1672	1818	12.6	1.36	63.8
	1600	102	F072209016011300	1072	1911	2078	14.4	1.36	72.4
	1800	102	F072209018011300	1205	2150	2338	16.2	1.36	81.1
	2000	102	F072209020011300	1339	2389	2598	18.0	1.36	89.8
	2300	102	F072209023011300	1540	2747	2987	20.7	1.36	106.9
	2600	102	F072209026011300	1741	3106	3377	23.4	1.36	115.8
	3000	102	F072209030011300	2009	3583	3896	27.0	1.36	133.1
Tips 33									
	400	152	F073309004011310 F073309004011300	364	651	708	5.3	1.36	29.7

900

AUGSTUMS 900 mm	GARUMS	DZIĻUMS			Jauda (W) 45/35/20°C	Jauda (W) 55/45/20°C	Jauda (W) 60/45/20°C	TILPUMS (l)	N-ekponents	SVARS (kg)
	500	152	F073309005011310	F073309005011300	455	814	885	6.7	1.36	36.3
	600	152	F073309006011310	F073309006011300	547	976	1062	8.0	1.36	42.9
	700	152	F073309007011310	F073309007011300	638	1139	1239	9.3	1.36	49.4
	800	152	F073309008011310	F073309008011300	729	1302	1416	10.6	1.36	56.0
	900	152	F073309009011310	F073309009011300	820	1465	1593	12.0	1.36	62.6
	1000	152	F073309010011310	F073309010011300	911	1627	1770	13.3	1.36	69.1
	1100	152	F073309011011310	F073309011011300	1002	1790	1947	14.6	1.36	75.7
	1200	152	F073309012011310	F073309012011300	1093	1953	2124	16.0	1.36	82.3
	1400	152	F073309014011310	F073309014011300	1275	2278	2478	18.6	1.36	95.4
	1600	152	F073309016011310	F073309016011300	1457	2604	2832	21.3	1.36	112.8
	1800	152	F073309018011310	F073309018011300	1640	2929	3186	23.9	1.36	121.7
	2000	152	F073309020011310	F073309020011300	1822	3255	3540	26.6	1.36	134.8
	2300	152	F073309023011310	F073309023011300	2095	3743	4071	30.6	1.36	154.5
	2600	152	F073309026011310	F073309026011300	2368	4231	4602	34.6	1.36	174.2
	3000	152	F073309030011310	F073309030011300	2733	4882	5310	39.9	1.36	2.5