Datenblatt
2026-10-28

Ramo Ventil Compact

Der Ramo Ventil Compact ist ein klassischer Kompaktheizkörper mit ...

- Plane Vorderfront
- flexible Anschlußmöglichkeiten
- 6 Anschlüße (4xseitlich, 2x unten)
- Große Vielfalt an Bauhöhen und -tiefen
- Elegantes Design

Der **Ramo Ventil Compact** ist ein klassischer Kompaktheizkörper mit einer flachen, feinprofilierten Front für geschlossene warmwasserbasierte Heizsysteme. Seine integrierte Ventilgarnitur ermöglicht eine attraktive und einfache Installation. Die Beschichtung ist standardmäßig weiß - RAL 9016.

Anwendungsbereich
Der Ramo Ventil Compact ist ein klassischer Kompaktheizkörper mit einer flachen, feinprofilierten Front für geschlossene warmwasserbasierte Heizsysteme. Seine integrierte Ventilgarnitur ermöglicht eine attraktive und einfache Installation. Die Beschichtung ist standardmäßig weiß - RAL 9016.

Dimensionierung
Für die richtige Produktauswahl oder weitere Infos nutzen Sie bitte unsere technischen Unterlagen, Produkthandbücher, unseren Planungsservice oder kontaktieren Sie uns via E-Mail oder Telefon.

Verwendung
Der Ramo Ventil Compact ist ein klassischer Kompaktheizkörper mit einer flachen, feinprofilierten Front für geschlossene warmwasserbasierte Heizsysteme. Seine integrierte Ventilgarnitur ermöglicht eine attraktive und einfache Installation. Die Beschichtung ist standardmäßig weiß - RAL 9016.

Ausschreibungstext
Purmo Ramo Ventil Compact
6-Muffen-Ventilheizkörper mit feinprofilierter Planfront ohne Laschenaufhängung Typen 21 S, 22, 33 und 44, Standard Rechtsanschluss
mit Laschenaufhängung Typ 11, Standard Rechtsanschluss

Fertiglackierter, mit Epoxydharzpulver beschichteter Heizkörper aus Stahlblech DC01 nach EN 10130 und EN 10131, Blechdicke gemäß Anforderungen der EN 442-1, mit einseitiger, verzinkter feinprofilierter Planfront, zur Anwendung in Warmwasserheizungsanlagen nach DIN 4751.

Entfettet, phosphatiert, im KTL-Verfahren tauchgrundiert und pulverbeschichtet nach DIN 55 900.

Wärmeleistung gemäß EN 442 und bei WSP-CERT registriert.

RAL-Gütezeichen, 10 Jahre Garantie

Montageverpackt, mit Pappkantenschutz, Pappschutzecken und Schrumpffolie.

Mit integrierter Ventilgarnitur und serienmäßig voreinstellbarem Ventileinsatz (Regelbereich 0,05 -0,70 m^3/h) zum Anbau von Thermostat-Ventilköpfen. Ventileinsatz leistungsmäßig werkseitig voreingestellt und farbig gekennzeichnet. Ventilgarnitur werkseitig für 2-Rohr-Betrieb, Anschlussmöglichkeit von unten über entsprechende Anschlussverschraubungen. Anschluss seitlich 4 x G ½" möglich.

Mit Zierabdeckung und Seitenverkleidungen, ab Baulänge 1800 mm mit zusätzlicher Befestigung der Zierabdeckung fertig montiert.

Bauhöhe 200 mm ohne Befestigung; Bauhöhen 300 bis 900 mm einschließlich FZ-Halterung(VDI 6036, AK2) mit Schallschutzeinlage inkl. Aushebesicherung für Typen 21S, 22 + 33 bzw. Schnellmontage-Set (VDI 6036, AK2) mit Aushebesicherungen und Schallschutzeinlagen für Typ 11, inkl. Schrauben und Dübel.

Ventileinsatz ½", Blind- und Entlüftungsstopfen werkseitig montiert

Ventilgarnitur standardmäßig rechts, auf Wunsch als Sonderanfertigung links ohne Mehrpreis lieferbar

Farbe: RAL 9016, weitere RAL Farben auf Anfrage
Betriebsdruck: 10 bar
Prüfdruck: 13 bar
Temperatur: max. 120° C
Medium: Wasser
Anschlüsse: 2 x G ½" unten, 4 x G ½" seitlich, nach ISO 228
Typen:11-EK; 21S-EKE schmal; 22-DK; 33-DKEK, 44-EKDKEK(BH 200)
Bauhöhen: 200, 300, 400, 500, 600, 900 mm
Baulängen: 400...2000 mm
Liefernachweis: PG Germany GmbH · Lierestraße 68 · 38690 Goslar
Telefon (0 53 24) 8 08-0 · Telefax (0 53 24) 8 08-999

Stück Typ: 11-EK, Ventil-Kompaktheizkörper - liefern
Bauhöhe:.....mm; Baulänge: .....mm - montieren

Stück Typ: 21S-EKE schmal, Ventil-Kompaktheizkörper - liefern
Bauhöhe:.....mm; Baulänge: .....mm - montieren

Stück Typ: 22-DK, Ventil-Kompaktheizkörper - liefern
Bauhöhe: .....mm; Baulänge: .....mm - montieren

Stück Typ: 33-DKEK, Ventil-Kompaktheizkörper - liefern
Bauhöhe: .....mm; Baulänge: .....mm - montieren

Stück Typ: 44-EKDKEK, Ventil-Kompaktheizkörper - liefern
Bauhöhe: .....mm; Baulänge: .....mm - montieren

Spezifikationen

EIGENSCHAFTEN	EINHEIT	WERTE
ETIM-Klasse		EC011022
Material		Stahl
Typ		11, 21, 22, 33
Bauart		flach glatt
Maximaler Betriebsdruck	bar	10
Anzahl der Standardanschlüsse		2
Wärmeleistung nach DIN EN 442 zertifiziert		Ja
Max. Betriebstemperatur	°C	110
Standardfarbe		Ja
Farbe		weiß
RAL-Nummer		9016
Ziergitter		Ja
Seitenteile		Ja
Glanzgrad		glänzend
Gewindemaß (Zoll)		1/2 Zoll
Gewindeanschluss		Innengewinde
Mit Einpunktanschluss		Ja
Mit Entlüftungsanschluss		Ja
Mit Entlüftungsventil		Ja
Mit Entleerungsmöglichkeit		Ja

Dokumente

DOKUMENTE	DOKUMENTENTYP	LINK
Gesamtprospekt Purmo Produktkatalog	ProductCatalog	https://asset.productmarketingcloud.com/api/assetstorage/3577_2fa18b7b-6b77-472f-80d4-925ab66fb184
Montagehandleiding_MCW_5_console	User	https://asset.productmarketingcloud.com/api/assetstorage/3577_b74fea56-fd9b-471b-b884-8bdd1117186d
Garantiebedingungen Heizkörper, Konvektoren und andere Komponenten	Warranty	https://asset.productmarketingcloud.com/api/assetstorage/3577_0b2455b1-4f72-4336-9409-00a3bb24227d
Montageanleitung FZ-Halterungen für Flachheizkörper	Installation	https://asset.productmarketingcloud.com/api/assetstorage/3577_40b8e51f-c96a-48bf-80ee-9adbe248dcac
Montageanleitung Schnellmontage-Set	Installation	https://asset.productmarketingcloud.com/api/assetstorage/3577_a03319f4-b913-485e-8b9e-437f1dde6ab3
Montageanleitung Standkonsole BH 300-900 mm	Installation	https://asset.productmarketingcloud.com/api/assetstorage/3577_73b1b432-1a36-40d5-944f-9374edb49a53
Leistungskalkulator Flachheizkörper	TechDia	https://asset.productmarketingcloud.com/api/assetstorage/3577_2da398bb-5820-4a58-af2d-62333aa4e65e

Ressourcen

ProductImage - Panel radiator Ramo Ventil Compact, RCV.

RAMO VENTIL COMPACT (mm)		
	RCV11	
A	a1	a2
400-1600	117	-
1800	117	917
2000	117	1017
2300	117	1150
2600	117	1317
3000	117	1517

DimensionalDrawing - Ramo-Ventil-Compact-table drawings a

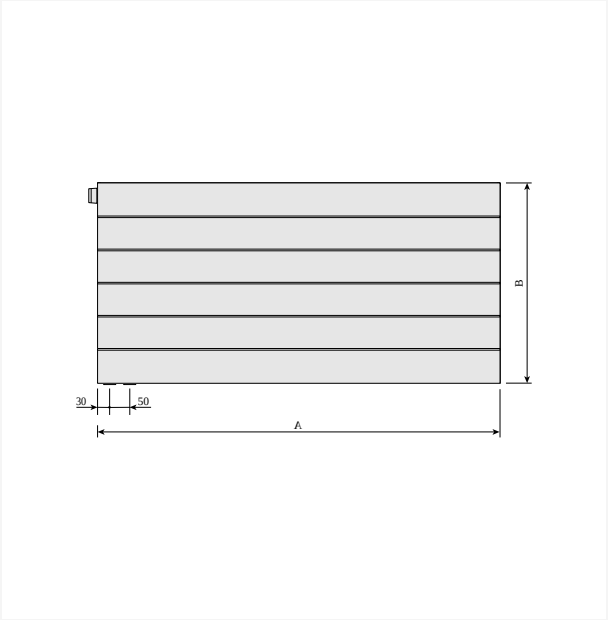

DimensionalDrawing - Ramo Ventil Compact, front view left

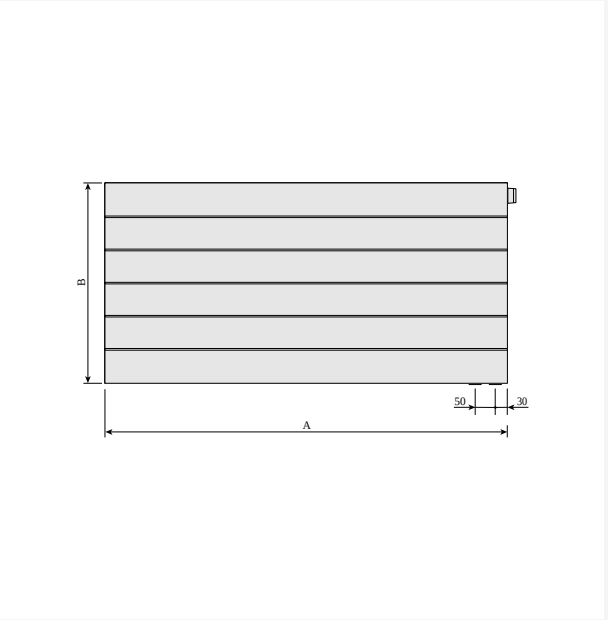

DimensionalDrawing - Ramo Ventil Compact, front view right

Ressourcen

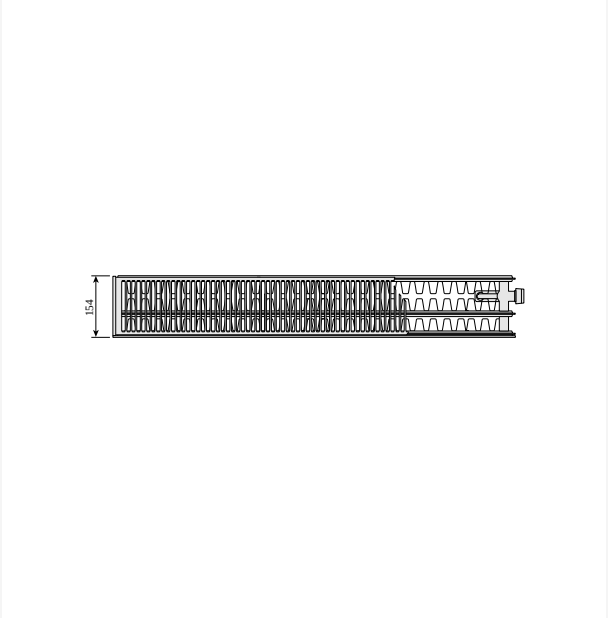

DimensionalDrawing - Plan Ventil Compact and Ramo Ventil Compact, type 33 right, top view

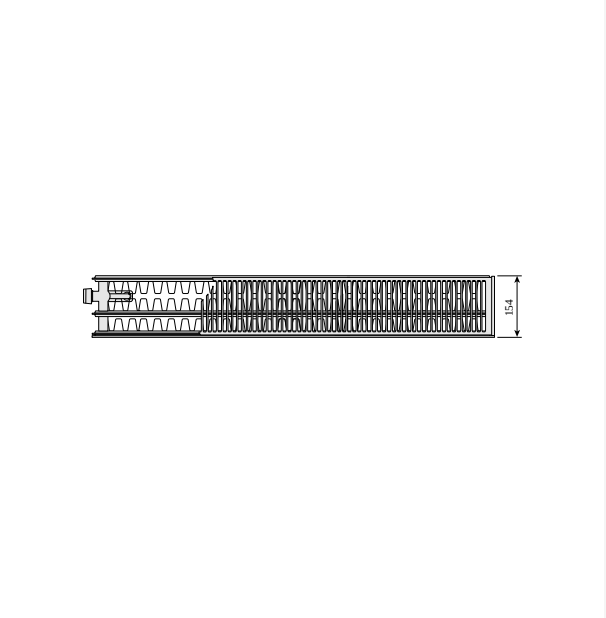

DimensionalDrawing - Plan Ventil Compact and Ramo Ventil Compact, type 33 left, top view

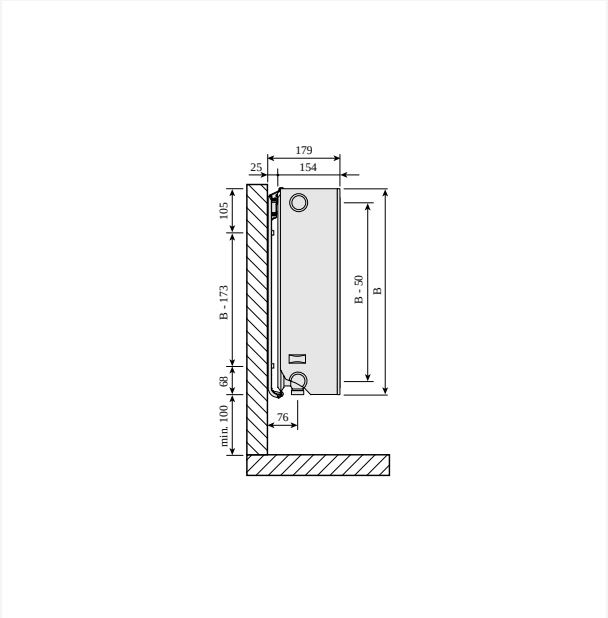

DimensionalDrawing - Plan Ventil Compact and Ramo Ventil Compact, types 30-33, side view

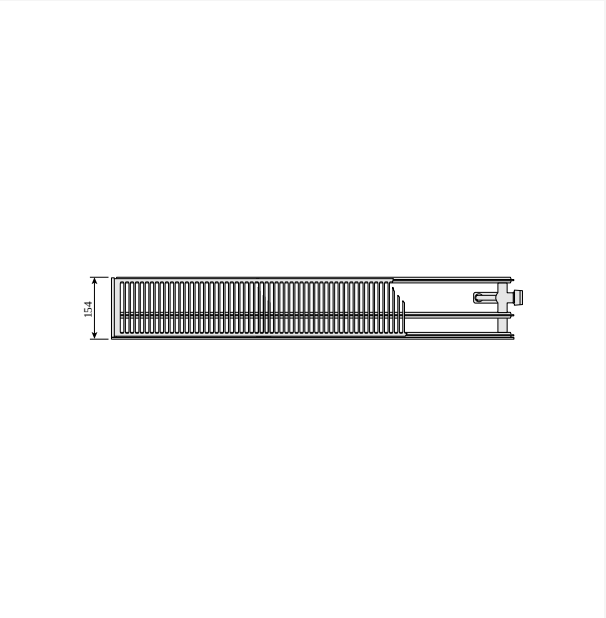

DimensionalDrawing - Plan Ventil Compact and Ramo Ventil Compact, type 30 right, top view

Ressourcen

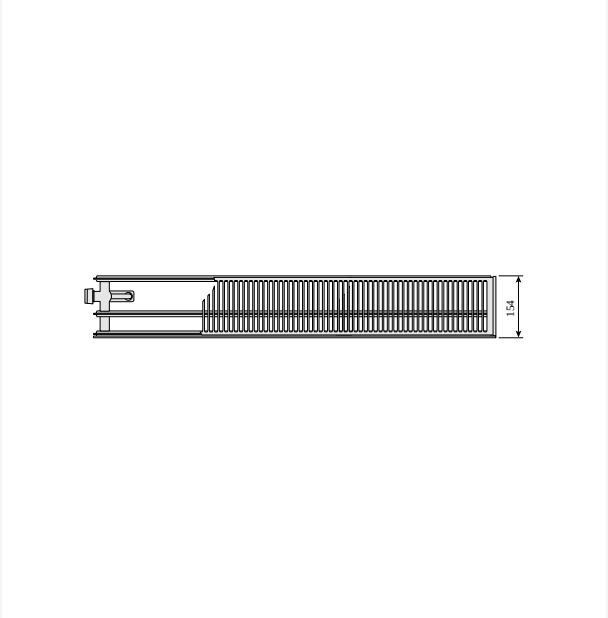

DimensionalDrawing - Plan Ventil Compact and Ramo Ventil Compact, type 30 left, top view

DimensionalDrawing - Plan Ventil Compact and Ramo Ventil Compact, type 22 right, top view

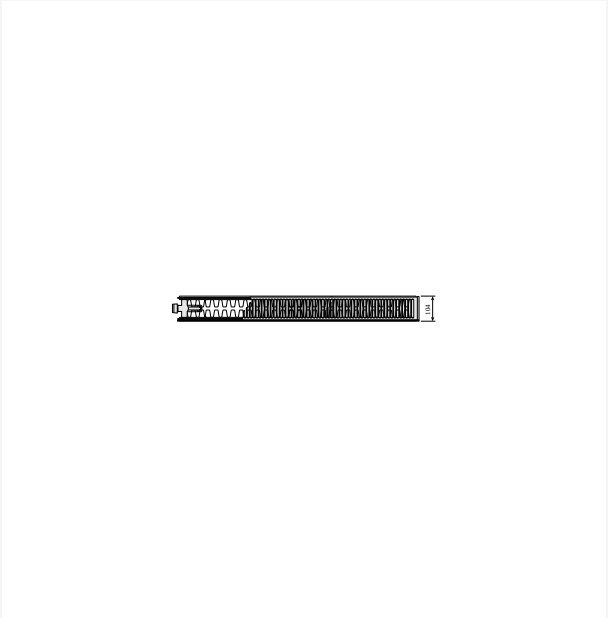

DimensionalDrawing - Plan Ventil Compact and Ramo Ventil Compact, type 22 left, top view

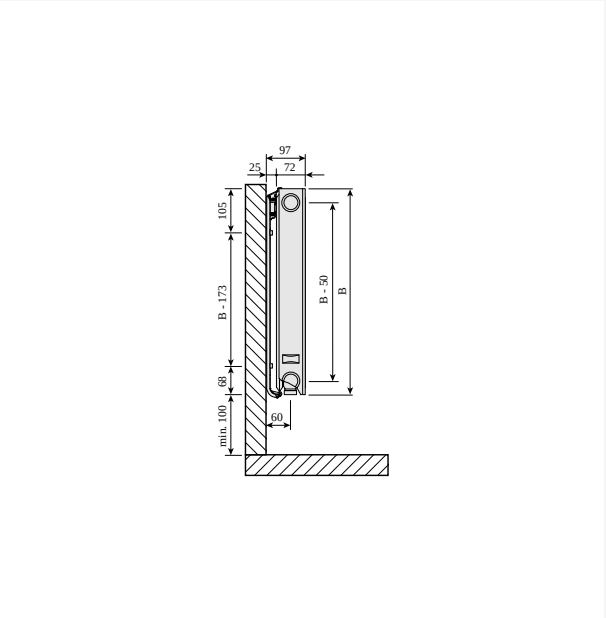

DimensionalDrawing - Plan Ventil Compact and Ramo Ventil Compact, type 21s, side view

Ressourcen

DimensionalDrawing - Plan Ventil Compact and Ramo Ventil Compact, type 21s right, top view

DimensionalDrawing - Plan Ventil Compact and Ramo Ventil Compact, type 21s left, top view

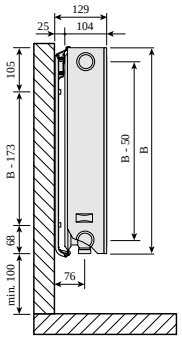

DimensionalDrawing - Plan Ventil Compact and Ramo Ventil Compact types 20-22, side view

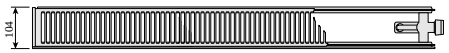

DimensionalDrawing - Plan Ventil Compact and Ramo Ventil Compact, type 20 right, top view

Ressourcen

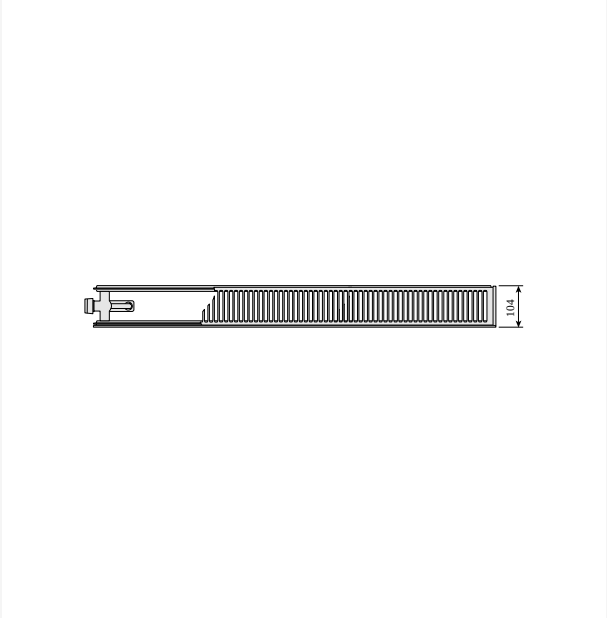

DimensionalDrawing - Plan Ventil Compact and Ramo Ventil Compact, type 20 left, top view

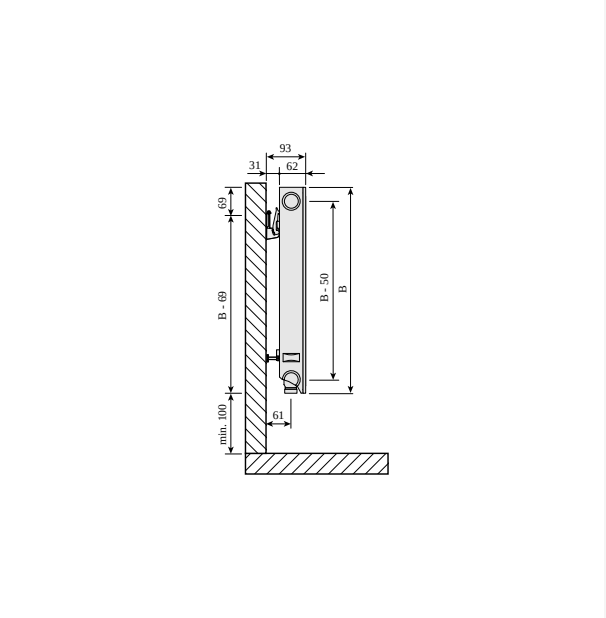

DimensionalDrawing - Plan Ventil Compact and Ramo Ventil Compact type 11, side view

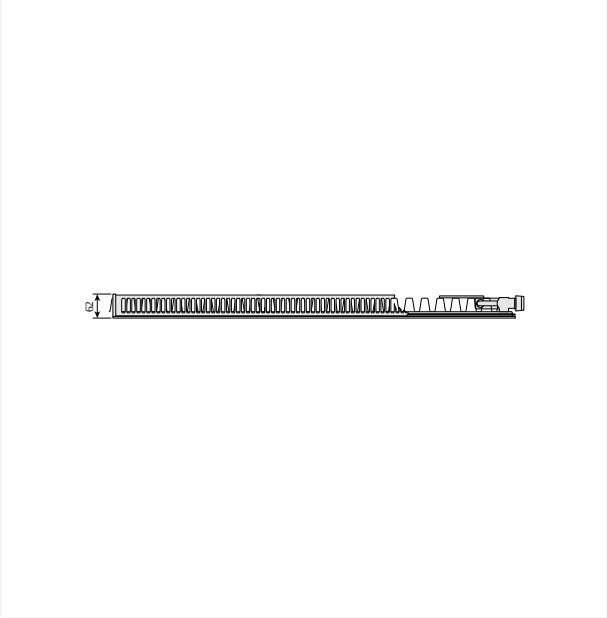

DimensionalDrawing - Plan Ventil Compact and Ramo Ventil Compact, type 11 right, top view

DimensionalDrawing - Plan Ventil Compact and Ramo Ventil Compact type 11 left, top view

Verwandte Produkte

Reinigungsbürste

300

Höhe 300 mm	Länge	Tiefe	Artikelnummer (links)	Artikelnummer (rechts)	Systemtemperatur 55/45/20 °C	Systemtemperatur 70/55/20 °C	Systemtemperatur 75/65/20 °C	Volumen (l)	Exponent n	Gewicht (kg)
Typ 11										
	400	6.2	F0G1103004010P10	F0G1103004010P00	110	172	212	0.7	1.28	5.6
	500	6.2	F0G1103005010P10	F0G1103005010P00	137	215	265	0.8	1.28	6.7
	600	6.2	F0G1103006010P10	F0G1103006010P00	165	258	317	1.0	1.28	7.7
	700	6.2	F0G1103007010P10	F0G1103007010P00	192	301	370	1.2	1.28	8.8
	800	6.2	F0G1103008010P10	F0G1103008010P00	220	344	423	1.4	1.28	10.2
	900	6.2	F0G1103009010P10	F0G1103009010P00	247	387	476	1.5	1.28	1.9
	1000	6.2	F0G1103010010P10	F0G1103010010P00	275	430	529	1.7	1.28	11.9
	1100	6.2	F0G1103011010P10	F0G1103011010P00	302	472	582	1.9	1.28	13.1
	1200	6.2	F0G1103012010P10	F0G1103012010P00	330	515	635	2.0	1.28	14.6
	1400	6.2	F0G1103014010P10	F0G1103014010P00	385	601	741	2.4	1.28	16.2
	1600	6.2	F0G1103016010P10	F0G1103016010P00	440	687	846	2.7	1.28	18.3
	1800	6.2	F0G1103018010P10	F0G1103018010P00	495	773	952	3.1	1.28	2.4
	2000	6.2	F0G1103020010P10	F0G1103020010P00	550	859	1058	3.4	1.28	22.5
	2300	6.2	F0G1103023010P10	F0G1103023010P00	632	988	1217	3.9	1.28	25.8
	2600	6.2	F0G1103026010P10	F0G1103026010P00	715	1117	1375	4.4	1.28	28.9
	3000	6.2	F0G1103030010P10	F0G1103030010P00	824	1289	1587	5.1	1.28	33.1
Typ 21										
	400	7.2	F0G2103004011P10	F0G2103004011P00	152	238	293	1.4	1.28	7.6
	500	7.2	F0G2103005011P10	F0G2103005011P00	190	297	366	1.7	1.28	9.2
	600	7.2	F0G2103006011P10	F0G2103006011P00	229	357	439	2.0	1.28	1.7
	700	7.2	F0G2103007011P10	F0G2103007011P00	267	416	512	2.4	1.28	12.2
	800	7.2	F0G2103008011P10	F0G2103008011P00	305	476	586	2.7	1.28	14.2
	900	7.2	F0G2103009011P10	F0G2103009011P00	343	535	659	3.1	1.28	15.2
	1000	7.2	F0G2103010011P10	F0G2103010011P00	381	595	732	3.4	1.28	16.7

300

Höhe 300 mm	Länge	Tiefe	Artikelnummer (links)	Artikelnummer (rechts)	Systemtemperatur 55/45/20 °C	Systemtemperatur 70/55/20 °C	Systemtemperatur 75/65/20 °C	Volumen (l)	Exponent n	Gewicht (kg)
	1100	7.2	F0G2103011011P10	F0G2103011011P00	419	654	805	3.7	1.28	18.4
	1200	7.2	F0G2103012011P10	F0G2103012011P00	457	714	878	4.1	1.28	19.7
	1400	7.2	F0G2103014011P10	F0G2103014011P00	533	833	1025	4.8	1.28	22.7
	1600	7.2	F0G2103016011P10	F0G2103016011P00	610	951	1171	5.4	1.28	25.8
	1800	7.2	F0G2103018011P10	F0G2103018011P00	686	1070	1318	6.1	1.28	28.8
	2000	7.2	F0G2103020011P10	F0G2103020011P00	762	1189	1464	6.8	1.28	31.8
	2300	7.2	F0G2103023011P10	F0G2103023011P00	876	1368	1684	7.8	1.28	36.3
	2600	7.2	F0G2103026011P10	F0G2103026011P00	990	1546	1903	8.8	1.28	4.9
	3000	7.2	F0G2103030011P10	F0G2103030011P00	1143	1784	2196	10.2	1.28	46.9
Typ 22										
	400	10.4	F0G2203004011P10	F0G2203004011P00	193	303	375	1.4	1.30	8.6
	500	10.4	F0G2203005011P10	F0G2203005011P00	241	379	469	1.7	1.30	1.2
	600	10.4	F0G2203006011P10	F0G2203006011P00	289	455	562	2.0	1.30	11.9
	700	10.4	F0G2203007011P10	F0G2203007011P00	338	531	656	2.4	1.30	13.6
	800	10.4	F0G2203008011P10	F0G2203008011P00	386	607	750	2.7	1.30	15.2
	900	10.4	F0G2203009011P10	F0G2203009011P00	434	683	843	3.1	1.30	16.9
	1000	10.4	F0G2203010011P10	F0G2203010011P00	482	759	937	3.4	1.30	18.5
	1100	10.4	F0G2203011011P10	F0G2203011011P00	531	834	1031	3.7	1.30	21.0
	1200	10.4	F0G2203012011P10	F0G2203012011P00	579	910	1124	4.1	1.30	21.9
	1400	10.4	F0G2203014011P10	F0G2203014011P00	675	1062	1312	4.8	1.30	25.2
	1600	10.4	F0G2203016011P10	F0G2203016011P00	772	1214	1499	5.4	1.30	28.5
	1800	10.4	F0G2203018011P10	F0G2203018011P00	868	1365	1687	6.1	1.30	31.8
	2000	10.4	F0G2203020011P10	F0G2203020011P00	965	1517	1874	6.8	1.30	35.1
	2300	10.4	F0G2203023011P10	F0G2203023011P00	1109	1745	2155	7.8	1.30	4.1
	2600	10.4	F0G2203026011P10	F0G2203026011P00	1254	1972	2436	8.8	1.30	45.1
	3000	10.4	F0G2203030011P10	F0G2203030011P00	1447	2276	2811	10.2	1.30	51.8

300

Höhe 300 mm	Länge	Tiefe	Artikelnummer (links)	Artikelnummer (rechts)	Systemtemperatur 55/45/20 °C	Systemtemperatur 70/55/20 °C	Systemtemperatur 75/65/20 °C	Volumen (l)	Exponent n	Gewicht (kg)
Typ 33										
	400	15.4	F0G3303004011P10	F0G3303004011P00	268	424	526	2.0	1.32	11.7
	500	15.4	F0G3303005011P10	F0G3303005011P00	335	531	657	2.5	1.32	14.5
	600	15.4	F0G3303006011P10	F0G3303006011P00	403	637	788	3.1	1.32	16.4
	700	15.4	F0G3303007011P10	F0G3303007011P00	470	743	920	3.6	1.32	18.8
	800	15.4	F0G3303008011P10	F0G3303008011P00	537	849	1051	4.1	1.32	21.2
	900	15.4	F0G3303009011P10	F0G3303009011P00	604	955	1183	4.6	1.32	23.5
	1000	15.4	F0G3303010011P10	F0G3303010011P00	671	1061	1314	5.1	1.32	25.9
	1100	15.4	F0G3303011011P10	F0G3303011011P00	738	1167	1445	5.6	1.32	28.3
	1200	15.4	F0G3303012011P10	F0G3303012011P00	805	1273	1577	6.1	1.32	3.6
	1400	15.4	F0G3303014011P10	F0G3303014011P00	939	1485	1840	7.1	1.32	35.4
	1600	15.4	F0G3303016011P10	F0G3303016011P00	1073	1698	2102	8.2	1.32	4.1
	1800	15.4	F0G3303018011P10	F0G3303018011P00	1208	1910	2365	9.2	1.32	44.9
	2000	15.4	F0G3303020011P10	F0G3303020011P00	1342	2122	2628	10.2	1.32	49.6
	2300	15.4	F0G3303023011P10	F0G3303023011P00	1543	2440	3022	11.7	1.32	56.8
	2600	15.4	F0G3303026011P10	F0G3303026011P00	1744	2759	3416	13.3	1.32	63.8
	3000	15.4	F0G3303030011P10	F0G3303030011P00	2013	3183	3942	15.3	1.32	73.3

400

Höhe 400 mm	Länge	Tiefe	Artikelnummer (links)	Artikelnummer (rechts)	Systemtemperatur 55/45/20 °C	Systemtemperatur 70/55/20 °C	Systemtemperatur 75/65/20 °C	Volumen (l)	Exponent n	Gewicht (kg)
Typ 11										
	400	6.2	F0G1104004010P10	F0G1104004010P00	141	221	272	0.9	1.28	7.4
	500	6.2	F0G1104005010P10	F0G1104005010P00	177	276	340	1.1	1.28	8.5
	600	6.2	F0G1104006010P10	F0G1104006010P00	212	331	408	1.3	1.28	10.4
	700	6.2	F0G1104007010P10	F0G1104007010P00	247	386	476	1.5	1.28	11.4
	800	6.2	F0G1104008010P10	F0G1104008010P00	283	442	544	1.8	1.28	12.8
	900	6.2	F0G1104009010P10	F0G1104009010P00	318	497	612	2.0	1.28	14.3
	1000	6.2	F0G1104010010P10	F0G1104010010P00	353	552	680	2.2	1.28	15.7
	1100	6.2	F0G1104011010P10	F0G1104011010P00	389	607	748	2.4	1.28	17.4
	1200	6.2	F0G1104012010P10	F0G1104012010P00	424	662	816	2.6	1.28	18.6
	1400	6.2	F0G1104014010P10	F0G1104014010P00	494	773	952	3.1	1.28	21.4
	1600	6.2	F0G1104016010P10	F0G1104016010P00	565	883	1088	3.5	1.28	24.3
	1800	6.2	F0G1104018010P10	F0G1104018010P00	636	994	1224	4.0	1.28	27.2
	2000	6.2	F0G1104020010P10	F0G1104020010P00	706	1104	1360	4.4	1.28	3.2
	2300	6.2	F0G1104023010P10	F0G1104023010P00	812	1270	1564	5.1	1.28	34.3
	2600	6.2	F0G1104026010P10	F0G1104026010P00	918	1435	1768	5.7	1.28	38.6
	3000	6.2	F0G1104030010P10	F0G1104030010P00	1060	1656	2040	6.6	1.28	44.4
Typ 21										
	400	7.2	F0G2104004011P10	F0G2104004011P00	193	302	372	1.8	1.28	10.4
	500	7.2	F0G2104005011P10	F0G2104005011P00	241	377	465	2.3	1.28	12.0
	600	7.2	F0G2104006011P10	F0G2104006011P00	289	452	557	2.7	1.28	14.0
	700	7.2	F0G2104007011P10	F0G2104007011P00	337	528	650	3.1	1.28	16.0
	800	7.2	F0G2104008011P10	F0G2104008011P00	386	603	743	3.6	1.28	18.0
	900	7.2	F0G2104009011P10	F0G2104009011P00	434	679	836	4.0	1.28	20.0
	1000	7.2	F0G2104010011P10	F0G2104010011P00	482	754	929	4.5	1.28	22.0
	1100	7.2	F0G2104011011P10	F0G2104011011P00	530	829	1022	5.0	1.28	24.0

400

Höhe 400 mm	Länge	Tiefe	Artikelnummer (links)	Artikelnummer (rechts)	Systemtemperatur 55/45/20 °C	Systemtemperatur 70/55/20 °C	Systemtemperatur 75/65/20 °C	Volumen (l)	Exponent n	Gewicht (kg)
	1200	7.2	F0G2104012011P10	F0G2104012011P00	578	905	1115	5.4	1.28	26.0
	1400	7.2	F0G2104014011P10	F0G2104014011P00	675	1056	1301	6.3	1.28	30.0
	1600	7.2	F0G2104016011P10	F0G2104016011P00	771	1206	1486	7.2	1.28	34.0
	1800	7.2	F0G2104018011P10	F0G2104018011P00	868	1357	1672	8.1	1.28	38.3
	2000	7.2	F0G2104020011P10	F0G2104020011P00	964	1508	1858	9.0	1.28	42.5
	2300	7.2	F0G2104023011P10	F0G2104023011P00	1109	1734	2137	10.3	1.28	48.8
	2600	7.2	F0G2104026011P10	F0G2104026011P00	1253	1960	2415	11.7	1.28	54.2
	3000	7.2	F0G2104030011P10	F0G2104030011P00	1446	2262	2787	13.5	1.28	62.3
Typ 22										
	400	10.4	F0G2204004011P10	F0G2204004011P00	245	387	479	1.8	1.31	11.5
	500	10.4	F0G2204005011P10	F0G2204005011P00	307	484	599	2.3	1.31	13.4
	600	10.4	F0G2204006011P10	F0G2204006011P00	368	581	719	2.7	1.31	15.6
	700	10.4	F0G2204007011P10	F0G2204007011P00	430	678	839	3.1	1.31	17.9
	800	10.4	F0G2204008011P10	F0G2204008011P00	491	775	958	3.6	1.31	2.2
	900	10.4	F0G2204009011P10	F0G2204009011P00	552	871	1078	4.0	1.31	22.4
	1000	10.4	F0G2204010011P10	F0G2204010011P00	614	968	1198	4.5	1.31	24.7
	1100	10.4	F0G2204011011P10	F0G2204011011P00	675	1065	1318	5.0	1.31	27.0
	1200	10.4	F0G2204012011P10	F0G2204012011P00	736	1162	1438	5.4	1.31	29.2
	1400	10.4	F0G2204014011P10	F0G2204014011P00	859	1356	1677	6.3	1.31	33.8
	1600	10.4	F0G2204016011P10	F0G2204016011P00	982	1549	1917	7.2	1.31	38.3
	1800	10.4	F0G2204018011P10	F0G2204018011P00	1104	1743	2156	8.1	1.31	42.8
	2000	10.4	F0G2204020011P10	F0G2204020011P00	1227	1937	2396	9.0	1.31	47.4
	2300	10.4	F0G2204023011P10	F0G2204023011P00	1411	2227	2755	10.3	1.31	54.2
	2600	10.4	F0G2204026011P10	F0G2204026011P00	1595	2518	3115	11.7	1.31	7.0
	3000	10.4	F0G2204030011P10	F0G2204030011P00	1841	2905	3594	13.5	1.31	7.5
Typ 33										

400

Höhe 400 mm	Länge	Tiefe	Artikelnummer (links)	Artikelnummer (rechts)	Systemtemperatur 55/45/20 °C	Systemtemperatur 70/55/20 °C	Systemtemperatur 75/65/20 °C	Volumen (l)	Exponent n	Gewicht (kg)
	400	15.4	F0G3304004011P10	F0G3304004011P00	338	537	666	2.7	1.32	15.3
	500	15.4	F0G3304005011P10	F0G3304005011P00	423	671	832	3.4	1.32	18.5
	600	15.4	F0G3304006011P10	F0G3304006011P00	508	805	998	4.0	1.32	21.7
	700	15.4	F0G3304007011P10	F0G3304007011P00	592	939	1165	4.7	1.32	24.9
	800	15.4	F0G3304008011P10	F0G3304008011P00	677	1073	1331	5.4	1.32	28.7
	900	15.4	F0G3304009011P10	F0G3304009011P00	761	1208	1498	6.0	1.32	31.3
	1000	15.4	F0G3304010011P10	F0G3304010011P00	846	1342	1664	6.7	1.32	34.4
	1100	15.4	F0G3304011011P10	F0G3304011011P00	930	1476	1830	7.4	1.32	37.6
	1200	15.4	F0G3304012011P10	F0G3304012011P00	1015	1610	1997	8.0	1.32	4.8
	1400	15.4	F0G3304014011P10	F0G3304014011P00	1184	1878	2330	9.4	1.32	47.2
	1600	15.4	F0G3304016011P10	F0G3304016011P00	1353	2147	2662	10.7	1.32	53.6
	1800	15.4	F0G3304018011P10	F0G3304018011P00	1523	2415	2995	12.1	1.32	59.9
	2000	15.4	F0G3304020011P10	F0G3304020011P00	1692	2683	3328	13.4	1.32	66.3
	2300	15.4	F0G3304023011P10	F0G3304023011P00	1946	3086	3827	15.4	1.32	75.9
	2600	15.4	F0G3304026011P10	F0G3304026011P00	2199	3489	4326	17.4	1.32	85.4
	3000	15.4	F0G3304030011P10	F0G3304030011P00	2538	4025	4992	20.1	1.32	102.1

500

Höhe 500 mm	Länge	Tiefe	Artikelnummer (links)	Artikelnummer (rechts)	Systemtemperatur 55/45/20 °C	Systemtemperatur 70/55/20 °C	Systemtemperatur 75/65/20 °C	Volumen (l)	Exponent n	Gewicht (kg)
Typ 11										
	400	6.2	F0G1105004010P10	F0G1105004010P00	171	267	329	1.1	1.28	8.8
	500	6.2	F0G1105005010P10	F0G1105005010P00	214	334	412	1.4	1.28	1.5
	600	6.2	F0G1105006010P10	F0G1105006010P00	256	401	494	1.6	1.28	12.3
	700	6.2	F0G1105007010P10	F0G1105007010P00	299	468	576	1.9	1.28	14.6
	800	6.2	F0G1105008010P10	F0G1105008010P00	342	535	658	2.2	1.28	15.8
	900	6.2	F0G1105009010P10	F0G1105009010P00	385	601	741	2.4	1.28	17.6
	1000	6.2	F0G1105010010P10	F0G1105010010P00	427	668	823	2.7	1.28	19.3
	1100	6.2	F0G1105011010P10	F0G1105011010P00	470	735	905	3.0	1.28	21.1
	1200	6.2	F0G1105012010P10	F0G1105012010P00	513	802	988	3.2	1.28	22.9
	1400	6.2	F0G1105014010P10	F0G1105014010P00	598	935	1152	3.8	1.28	26.4
	1600	6.2	F0G1105016010P10	F0G1105016010P00	684	1069	1317	4.3	1.28	29.9
	1800	6.2	F0G1105018010P10	F0G1105018010P00	769	1203	1481	4.9	1.28	33.4
	2000	6.2	F0G1105020010P10	F0G1105020010P00	855	1336	1646	5.4	1.28	37.0
	2300	6.2	F0G1105023010P10	F0G1105023010P00	983	1537	1893	6.2	1.28	42.2
	2600	6.2	F0G1105026010P10	F0G1105026010P00	1111	1737	2140	7.0	1.28	47.5
	3000	6.2	F0G1105030010P10	F0G1105030010P00	1282	2004	2469	8.1	1.28	54.6
Typ 21										
	400	7.2	F0G2105004011P10	F0G2105004011P00	230	361	445	2.2	1.29	12.0
	500	7.2	F0G2105005011P10	F0G2105005011P00	288	451	557	2.8	1.29	14.6
	600	7.2	F0G2105006011P10	F0G2105006011P00	345	541	668	3.3	1.29	17.5
	700	7.2	F0G2105007011P10	F0G2105007011P00	403	632	779	3.9	1.29	19.6
	800	7.2	F0G2105008011P10	F0G2105008011P00	461	722	890	4.4	1.29	22.2
	900	7.2	F0G2105009011P10	F0G2105009011P00	518	812	1002	5.0	1.29	24.6
	1000	7.2	F0G2105010011P10	F0G2105010011P00	576	902	1113	5.5	1.29	27.2
	1100	7.2	F0G2105011011P10	F0G2105011011P00	633	993	1224	6.0	1.29	29.7

500

Höhe 500 mm	Länge	Tiefe	Artikelnummer (links)	Artikelnummer (rechts)	Systemtemperatur 55/45/20 °C	Systemtemperatur 70/55/20 °C	Systemtemperatur 75/65/20 °C	Volumen (l)	Exponent n	Gewicht (kg)
	1200	7.2	F0G2105012011P10	F0G2105012011P00	691	1083	1336	6.6	1.29	32.3
	1400	7.2	F0G2105014011P10	F0G2105014011P00	806	1263	1558	7.7	1.29	37.3
	1600	7.2	F0G2105016011P10	F0G2105016011P00	921	1444	1781	8.8	1.29	42.4
	1800	7.2	F0G2105018011P10	F0G2105018011P00	1036	1624	2003	9.9	1.29	47.5
	2000	7.2	F0G2105020011P10	F0G2105020011P00	1151	1805	2226	11.0	1.29	52.5
	2300	7.2	F0G2105023011P10	F0G2105023011P00	1324	2076	2560	12.7	1.29	6.1
	2600	7.2	F0G2105026011P10	F0G2105026011P00	1497	2346	2894	14.3	1.29	67.8
	3000	7.2	F0G2105030011P10	F0G2105030011P00	1727	2707	3339	16.5	1.29	77.9
Typ 22										
	400	10.4	F0G2205004011P10	F0G2205004011P00	294	466	578	2.2	1.32	13.7
	500	10.4	F0G2205005011P10	F0G2205005011P00	368	583	722	2.8	1.32	16.5
	600	10.4	F0G2205006011P10	F0G2205006011P00	442	699	866	3.3	1.32	19.3
	700	10.4	F0G2205007011P10	F0G2205007011P00	515	816	1011	3.9	1.32	22.2
	800	10.4	F0G2205008011P10	F0G2205008011P00	589	932	1155	4.4	1.32	25.0
	900	10.4	F0G2205009011P10	F0G2205009011P00	662	1049	1300	5.0	1.32	27.8
	1000	10.4	F0G2205010011P10	F0G2205010011P00	736	1165	1444	5.5	1.32	3.6
	1100	10.4	F0G2205011011P10	F0G2205011011P00	809	1282	1588	6.0	1.32	33.4
	1200	10.4	F0G2205012011P10	F0G2205012011P00	883	1398	1733	6.6	1.32	36.2
	1400	10.4	F0G2205014011P10	F0G2205014011P00	1030	1631	2022	7.7	1.32	41.9
	1600	10.4	F0G2205016011P10	F0G2205016011P00	1177	1864	2310	8.8	1.32	47.5
	1800	10.4	F0G2205018011P10	F0G2205018011P00	1325	2097	2599	9.9	1.32	53.2
	2000	10.4	F0G2205020011P10	F0G2205020011P00	1472	2331	2888	11.0	1.32	58.8
	2300	10.4	F0G2205023011P10	F0G2205023011P00	1692	2680	3321	12.7	1.32	67.2
	2600	10.4	F0G2205026011P10	F0G2205026011P00	1913	3030	3754	14.3	1.32	75.7
	3000	10.4	F0G2205030011P10	F0G2205030011P00	2208	3496	4332	16.5	1.32	87.0
Typ 33										

500

Höhe 500 mm	Länge	Tiefe	Artikelnummer (links)	Artikelnummer (rechts)	Systemtemperatur 55/45/20 °C	Systemtemperatur 70/55/20 °C	Systemtemperatur 75/65/20 °C	Volumen (l)	Exponent n	Gewicht (kg)
	400	15.4	F0G3305004011P10	F0G3305004011P00	404	642	798	3.3	1.33	18.8
	500	15.4	F0G3305005011P10	F0G3305005011P00	505	803	997	4.1	1.33	22.8
	600	15.4	F0G3305006011P10	F0G3305006011P00	606	963	1196	4.9	1.33	27.0
	700	15.4	F0G3305007011P10	F0G3305007011P00	706	1124	1396	5.7	1.33	4.0
	800	15.4	F0G3305008011P10	F0G3305008011P00	807	1284	1595	6.6	1.33	35.2
	900	15.4	F0G3305009011P10	F0G3305009011P00	908	1445	1795	7.4	1.33	40.0
	1000	15.4	F0G3305010011P10	F0G3305010011P00	1009	1606	1994	8.2	1.33	43.2
	1100	15.4	F0G3305011011P10	F0G3305011011P00	1110	1766	2193	9.0	1.33	47.2
	1200	15.4	F0G3305012011P10	F0G3305012011P00	1211	1927	2393	9.8	1.33	51.3
	1400	15.4	F0G3305014011P10	F0G3305014011P00	1413	2248	2792	11.5	1.33	59.4
	1600	15.4	F0G3305016011P10	F0G3305016011P00	1615	2569	3190	13.1	1.33	67.6
	1800	15.4	F0G3305018011P10	F0G3305018011P00	1817	2890	3589	14.8	1.33	75.7
	2000	15.4	F0G3305020011P10	F0G3305020011P00	2018	3211	3988	16.4	1.33	83.8
	2300	15.4	F0G3305023011P10	F0G3305023011P00	2321	3693	4586	18.9	1.33	96.2
	2600	15.4	F0G3305026011P10	F0G3305026011P00	2624	4175	5184	21.3	1.33	112.5
	3000	15.4	F0G3305030011P10	F0G3305030011P00	3028	4817	5982	24.6	1.33	124.5

600

Höhe 600 mm	Länge	Tiefe	Artikelnummer (links)	Artikelnummer (rechts)	Systemtemperatur 55/45/20 °C	Systemtemperatur 70/55/20 °C	Systemtemperatur 75/65/20 °C	Volumen (l)	Exponent n	Gewicht (kg)
Typ 11										
	400	6.2	F0G1106004010P10	F0G1106004010P00	200	312	384	1.3	1.28	1.3
	500	6.2	F0G1106005010P10	F0G1106005010P00	249	390	481	1.6	1.28	12.4
	600	6.2	F0G1106006010P10	F0G1106006010P00	299	468	577	1.9	1.28	14.6
	700	6.2	F0G1106007010P10	F0G1106007010P00	349	546	673	2.2	1.28	16.7
	800	6.2	F0G1106008010P10	F0G1106008010P00	399	624	769	2.6	1.28	18.9
	900	6.2	F0G1106009010P10	F0G1106009010P00	449	702	865	2.9	1.28	3.0
	1000	6.2	F0G1106010010P10	F0G1106010010P00	499	780	961	3.2	1.28	23.1
	1100	6.2	F0G1106011010P10	F0G1106011010P00	549	858	1057	3.5	1.28	25.2
	1200	6.2	F0G1106012010P10	F0G1106012010P00	599	936	1153	3.8	1.28	27.4
	1400	6.2	F0G1106014010P10	F0G1106014010P00	699	1092	1345	4.5	1.28	31.6
	1600	6.2	F0G1106016010P10	F0G1106016010P00	798	1248	1538	5.1	1.28	35.9
	1800	6.2	F0G1106018010P10	F0G1106018010P00	898	1404	1730	5.8	1.28	4.2
	2000	6.2	F0G1106020010P10	F0G1106020010P00	998	1560	1922	6.4	1.28	44.4
	2300	6.2	F0G1106023010P10	F0G1106023010P00	1148	1794	2210	7.4	1.28	5.8
	2600	6.2	F0G1106026010P10	F0G1106026010P00	1297	2028	2499	8.3	1.28	57.2
	3000	6.2	F0G1106030010P10	F0G1106030010P00	1497	2340	2883	9.6	1.28	65.7
Typ 21										
	400	7.2	F0G2106004011P10	F0G2106004011P00	266	417	515	2.6	1.30	14.4
	500	7.2	F0G2106005011P10	F0G2106005011P00	332	522	644	3.3	1.30	17.5
	600	7.2	F0G2106006011P10	F0G2106006011P00	398	626	773	4.0	1.30	2.5
	700	7.2	F0G2106007011P10	F0G2106007011P00	465	730	902	4.6	1.30	23.6
	800	7.2	F0G2106008011P10	F0G2106008011P00	531	835	1030	5.3	1.30	26.6
	900	7.2	F0G2106009011P10	F0G2106009011P00	598	939	1159	5.9	1.30	29.7
	1000	7.2	F0G2106010011P10	F0G2106010011P00	664	1043	1288	6.6	1.30	32.7
	1100	7.2	F0G2106011011P10	F0G2106011011P00	731	1148	1417	7.3	1.30	35.8

600

Höhe 600 mm	Länge	Tiefe	Artikelnummer (links)	Artikelnummer (rechts)	Systemtemperatur 55/45/20 °C	Systemtemperatur 70/55/20 °C	Systemtemperatur 75/65/20 °C	Volumen (l)	Exponent n	Gewicht (kg)
	1200	7.2	F0G2106012011P10	F0G2106012011P00	797	1252	1546	7.9	1.30	38.8
	1400	7.2	F0G2106014011P10	F0G2106014011P00	930	1461	1803	9.2	1.30	44.9
	1600	7.2	F0G2106016011P10	F0G2106016011P00	1063	1669	2061	10.6	1.30	51.1
	1800	7.2	F0G2106018011P10	F0G2106018011P00	1195	1878	2318	11.9	1.30	57.1
	2000	7.2	F0G2106020011P10	F0G2106020011P00	1328	2087	2576	13.2	1.30	63.2
	2300	7.2	F0G2106023011P10	F0G2106023011P00	1527	2400	2962	15.2	1.30	72.4
	2600	7.2	F0G2106026011P10	F0G2106026011P00	1727	2712	3349	17.2	1.30	81.5
	3000	7.2	F0G2106030011P10	F0G2106030011P00	1992	3130	3864	19.8	1.30	93.7
Typ 22										
	400	10.4	F0G2206004011P10	F0G2206004011P00	340	540	670	2.6	1.33	16.4
	500	10.4	F0G2206005011P10	F0G2206005011P00	425	675	838	3.3	1.33	19.8
	600	10.4	F0G2206006011P10	F0G2206006011P00	510	810	1006	4.0	1.33	23.3
	700	10.4	F0G2206007011P10	F0G2206007011P00	595	945	1173	4.6	1.33	26.7
	800	10.4	F0G2206008011P10	F0G2206008011P00	680	1080	1341	5.3	1.33	3.2
	900	10.4	F0G2206009011P10	F0G2206009011P00	765	1215	1508	5.9	1.33	33.7
	1000	10.4	F0G2206010011P10	F0G2206010011P00	850	1350	1676	6.6	1.33	37.1
	1100	10.4	F0G2206011011P10	F0G2206011011P00	935	1485	1844	7.3	1.33	4.6
	1200	10.4	F0G2206012011P10	F0G2206012011P00	1020	1620	2011	7.9	1.33	44.2
	1400	10.4	F0G2206014011P10	F0G2206014011P00	1190	1890	2346	9.2	1.33	5.9
	1600	10.4	F0G2206016011P10	F0G2206016011P00	1360	2161	2682	10.6	1.33	57.8
	1800	10.4	F0G2206018011P10	F0G2206018011P00	1530	2431	3017	11.9	1.33	64.7
	2000	10.4	F0G2206020011P10	F0G2206020011P00	1700	2701	3352	13.2	1.33	71.7
	2300	10.4	F0G2206023011P10	F0G2206023011P00	1955	3106	3855	15.2	1.33	82.3
	2600	10.4	F0G2206026011P10	F0G2206026011P00	2210	3511	4358	17.2	1.33	92.4
	3000	10.4	F0G2206030011P10	F0G2206030011P00	2549	4051	5028	19.8	1.33	110.4
Typ 33										

600

Höhe 600 mm	Länge	Tiefe	Artikelnummer (links)	Artikelnummer (rechts)	Systemtemperatur 55/45/20 °C	Systemtemperatur 70/55/20 °C	Systemtemperatur 75/65/20 °C	Volumen (l)	Exponent n	Gewicht (kg)
	400	15.4	F0G3306004011P10	F0G3306004011P00	465	743	924	3.9	1.34	22.5
	500	15.4	F0G3306005011P10	F0G3306005011P00	582	928	1155	4.9	1.34	27.4
	600	15.4	F0G3306006011P10	F0G3306006011P00	698	1114	1385	5.9	1.34	32.2
	700	15.4	F0G3306007011P10	F0G3306007011P00	814	1300	1616	6.9	1.34	37.9
	800	15.4	F0G3306008011P10	F0G3306008011P00	931	1485	1847	7.8	1.34	42.0
	900	15.4	F0G3306009011P10	F0G3306009011P00	1047	1671	2078	8.8	1.34	46.8
	1000	15.4	F0G3306010011P10	F0G3306010011P00	1164	1857	2309	9.8	1.34	51.7
	1100	15.4	F0G3306011011P10	F0G3306011011P00	1280	2042	2540	10.8	1.34	56.6
	1200	15.4	F0G3306012011P10	F0G3306012011P00	1396	2228	2771	11.8	1.34	61.4
	1400	15.4	F0G3306014011P10	F0G3306014011P00	1629	2599	3233	13.7	1.34	71.2
	1600	15.4	F0G3306016011P10	F0G3306016011P00	1862	2971	3694	15.7	1.34	8.9
	1800	15.4	F0G3306018011P10	F0G3306018011P00	2094	3342	4156	17.6	1.34	9.7
	2000	15.4	F0G3306020011P10	F0G3306020011P00	2327	3713	4618	19.6	1.34	1.4
	2300	15.4	F0G3306023011P10	F0G3306023011P00	2676	4270	5311	22.5	1.34	115.1
	2600	15.4	F0G3306026011P10	F0G3306026011P00	3025	4827	6003	25.5	1.34	129.6
	3000	15.4	F0G3306030011P10	F0G3306030011P00	3491	5570	6927	29.4	1.34	149.9

900

Höhe 900 mm	Länge	Tiefe	Artikelnummer (links)	Artikelnummer (rechts)	Systemtemperatur 55/45/20 °C	Systemtemperatur 70/55/20 °C	Systemtemperatur 75/65/20 °C	Volumen (l)	Exponent n	Gewicht (kg)
Typ 11										
	400	6.2	F0G1109004010P10	F0G1109004010P00	277	436	539	1.8	1.30	14.9
	500	6.2	F0G1109005010P10	F0G1109005010P00	346	545	674	2.3	1.30	18.2
	600	6.2	F0G1109006010P10	F0G1109006010P00	416	654	808	2.7	1.30	21.4
	700	6.2	F0G1109007010P10	F0G1109007010P00	485	763	943	3.1	1.30	24.6
	800	6.2	F0G1109008010P10	F0G1109008010P00	554	872	1078	3.6	1.30	27.9
	900	6.2	F0G1109009010P10	F0G1109009010P00	624	981	1212	4.0	1.30	32.4
	1000	6.2	F0G1109010010P10	F0G1109010010P00	693	1090	1347	4.5	1.30	34.3
	1100	6.2	F0G1109011010P10	F0G1109011010P00	762	1199	1482	5.0	1.30	37.6
	1200	6.2	F0G1109012010P10	F0G1109012010P00	831	1308	1616	5.4	1.30	4.8
	1400	6.2	F0G1109014010P10	F0G1109014010P00	970	1526	1886	6.3	1.30	47.3
	1600	6.2	F0G1109016010P10	F0G1109016010P00	1109	1744	2155	7.2	1.30	53.8
	1800	6.2	F0G1109018010P10	F0G1109018010P00	1247	1962	2425	8.1	1.30	6.2
	2000	6.2	F0G1109020010P10	F0G1109020010P00	1386	2180	2694	9.0	1.30	66.7
Typ 21										
	400	7.2	F0G2109004011P10	F0G2109004011P00	357	568	706	3.6	1.34	2.9
	500	7.2	F0G2109005011P10	F0G2109005011P00	446	710	883	4.5	1.34	25.5
	600	7.2	F0G2109006011P10	F0G2109006011P00	535	852	1059	5.4	1.34	3.2
	700	7.2	F0G2109007011P10	F0G2109007011P00	624	994	1236	6.3	1.34	34.8
	800	7.2	F0G2109008011P10	F0G2109008011P00	713	1136	1412	7.2	1.34	39.4
	900	7.2	F0G2109009011P10	F0G2109009011P00	802	1278	1589	8.1	1.34	44.1
	1000	7.2	F0G2109010011P10	F0G2109010011P00	891	1420	1765	9.0	1.34	48.7
	1100	7.2	F0G2109011011P10	F0G2109011011P00	981	1562	1942	9.9	1.34	53.4
	1200	7.2	F0G2109012011P10	F0G2109012011P00	1070	1704	2118	10.8	1.34	58.4
	1400	7.2	F0G2109014011P10	F0G2109014011P00	1248	1988	2471	12.6	1.34	67.3
	1600	7.2	F0G2109016011P10	F0G2109016011P00	1426	2272	2824	14.4	1.34	76.6

900

Höhe 900 mm	Länge	Tiefe	Artikelnummer (links)	Artikelnummer (rechts)	Systemtemperatur 55/45/20 °C	Systemtemperatur 70/55/20 °C	Systemtemperatur 75/65/20 °C	Volumen (l)	Exponent n	Gewicht (kg)
	1800	7.2	F0G2109018011P10	F0G2109018011P00	1605	2556	3177	16.2	1.34	85.9
	2000	7.2	F0G2109020011P10	F0G2109020011P00	1783	2841	3530	18.0	1.34	95.2
Typ 22										
	400	10.4	F0G2209004011P10	F0G2209004011P00	462	739	920	3.6	1.35	23.9
	500	10.4	F0G2209005011P10	F0G2209005011P00	578	924	1151	4.5	1.35	28.9
	600	10.4	F0G2209006011P10	F0G2209006011P00	693	1109	1381	5.4	1.35	34.9
	700	10.4	F0G2209007011P10	F0G2209007011P00	809	1294	1611	6.3	1.35	39.2
	800	10.4	F0G2209008011P10	F0G2209008011P00	924	1478	1841	7.2	1.35	44.4
	900	10.4	F0G2209009011P10	F0G2209009011P00	1040	1663	2071	8.1	1.35	49.5
	1000	10.4	F0G2209010011P10	F0G2209010011P00	1155	1848	2301	9.0	1.35	54.6
	1100	10.4	F0G2209011011P10	F0G2209011011P00	1271	2033	2531	9.9	1.35	59.8
	1200	10.4	F0G2209012011P10	F0G2209012011P00	1386	2218	2761	10.8	1.35	64.9
	1400	10.4	F0G2209014011P10	F0G2209014011P00	1617	2587	3221	12.6	1.35	75.2
	1600	10.4	F0G2209016011P10	F0G2209016011P00	1848	2957	3682	14.4	1.35	85.5
	1800	10.4	F0G2209018011P10	F0G2209018011P00	2080	3327	4142	16.2	1.35	95.7
	2000	10.4	F0G2209020011P10	F0G2209020011P00	2311	3696	4602	18.0	1.35	110.2
Typ 33										
	400	15.4	F0G3309004011P10	F0G3309004011P00	633	1017	1268	5.3	1.36	33.8
	500	15.4	F0G3309005011P10	F0G3309005011P00	791	1271	1586	6.7	1.36	4.4
	600	15.4	F0G3309006011P10	F0G3309006011P00	949	1525	1903	8.0	1.36	47.8
	700	15.4	F0G3309007011P10	F0G3309007011P00	1107	1779	2220	9.3	1.36	55.2
	800	15.4	F0G3309008011P10	F0G3309008011P00	1266	2033	2537	10.6	1.36	62.6
	900	15.4	F0G3309009011P10	F0G3309009011P00	1424	2288	2854	12.0	1.36	69.9
	1000	15.4	F0G3309010011P10	F0G3309010011P00	1582	2542	3171	13.3	1.36	77.3
	1100	15.4	F0G3309011011P10	F0G3309011011P00	1740	2796	3488	14.6	1.36	84.7
	1200	15.4	F0G3309012011P10	F0G3309012011P00	1898	3050	3805	16.0	1.36	92.6

900

Höhe 900 mm	Länge	Tiefe	Artikelnummer (links)	Artikelnummer (rechts)	Systemtemperatur 55/45/20 °C	Systemtemperatur 70/55/20 °C	Systemtemperatur 75/65/20 °C	Volumen (l)	Exponent n	Gewicht (kg)
	1400	15.4	F0G3309014011P10	F0G3309014011P00	2215	3558	4439	18.6	1.36	111.1
	1600	15.4	F0G3309016011P10	F0G3309016011P00	2531	4067	5074	21.3	1.36	121.5
	1800	15.4	F0G3309018011P10	F0G3309018011P00	2848	4575	5708	23.9	1.36	136.3
	2000	15.4	F0G3309020011P10	F0G3309020011P00	3164	5083	6342	26.6	1.36	151.3